أكاديمية تقييم
TAQEEM ACADEMY

الهيئة السعودية للمقيّمين المعتمدين
Saudi Authority for Accredited Valuers
تقييم
TAQEEM

Advanced Level 2: Applied Machinery and Equipment Valuation

Integrated Project

405

FEB - 2022

MODULE ME 405

Advanced Level 2: Applied Machinery and Equipment Valuation – Integrated Project

Objective

At the end of the program, participants will be able to conduct a valuation process and analysis for different machinery and equipment.

Contents

- Lecture and discussion on the sample integrated project
  - Cement Manufacturing Plant
  - Dairy Product Processing Plant
  - Information Technology – Data Center
- Integrated Project Site Visit
- Project preparation
- Project presentation

Methodology

- Lecture
- Discussion
- Site Visit
- Group project
- Individual Presentation

Duration

- 5 days

Program Schedule

Training Programme : **Module ME 405**
Advanced Level 2: Applied Machinery and Equipment Valuation – Integrated Project
Duration : **5 Days**
Date : **2020**

DATE/ TIME	DAY 1	DAY 2	DAY 3	DAY 4	DAY 5
0830 – 1030	**Session 1** Lecture & Discussion - Cement Manufacturing Plant	Continuation of Session 2	**Session 4** Briefing & Site Visit – Cement Manufacturing Plant	**Session 5** Briefing & Site Visit – Dairy Product Processing Plant	**Session 6** Briefing & Site Visit – Information Technology – Data Center
1030 – 1100					
1100 – 1200	Continuation of Session 1	**Session 3** Lecture & Discussion – Information Technology – Data Center	Continuation of Session 4	Continuation of Session 5	Continuation of Session 6
1200 – 1300					
1300 – 1330					
1330 – 1530	**Session 2** Lecture & Discussion – Dairy Product Processing Plant	Continuation of Session 3	Continuation of Session 4	Continuation of Session 5	Continuation of Session 6

SESSION PLAN

Training Programme	**:**	**Module ME 405** **Advanced Level 2: Applied Machinery and Equipment Valuation – Integrated Project**
Duration	**:**	**5 Days**
Objective	**:**	At the end of the programme, participants will be able to conduct a valuation process and analysis for different machinery and equipment.

Date/ time	Session	Session Objective	Session Content	Methodology
Day 1 0830 – 1030 1100 – 1300 1330 – 1530 (4 hours)	**Session 1** Lecture & Discussion – Cement Manufacturing Plant	At the end of the session participants will be able gain knowledge to the valuation application for Cement Manufacturing Plant.	• Introduction to Integrated Project ME 405 • Objective of Integrated Project • Valuation of Cement Manufacturing Plant ○ Introduction ○ Cement Production in Saudi Arabia ○ Cement Manufacturing Process ▪ Raw Material Preparation ▪ Raw Material Homogenization ▪ Raw Material Drying-Grinding ▪ Pyroprocessing ▪ Cement Production Process ▪ Cement Packaging ○ Conclusion	• Lecture • Discussion • Q & A
Day 1 1330 – 1530 **Day 2** 0830 – 1030 (4 hours)	**Session 2** Lecture & Discussion – Dairy Processing Plant	At the end of the session participants will be able gain knowledge to the valuation application for Dairy Processing Plant.	• Valuation of Dairy Product Processing Plant ○ Introduction ○ Dairy Product Processing in Saudi Arabia ○ Dairy Product Manufacturing Process ▪ Milk Collection and Reception at Processing Facility ▪ Raw Milk Processing ▪ Milk Product Packaging ○ Other Equipment in Dairy Plant ○ Conclusion	• Lecture • Discussion • Q & A

Date/ time	Session	Session Objective	Session Content	Methodology
Day 2 1100 – 1300 1330 – 1530 (4 hours)	**Session 3** Lecture & Discussion – Information Technology (Data Center)	At the end of the session participants will be able gain knowledge to the valuation application for Information Technology (Data Center).	• Valuation of Information Technology (Data Center) ○ Introduction ○ Information Technology (Data Center) in Saudi Arabia ○ Components in Information Technology (Data Center) ▪ Servers ▪ Routers ▪ Switches ▪ Computers ▪ Firewalls ▪ Uninterruptible Power Supply (UPS) ▪ Non-Computing Physical Components in the Data Center ○ Conclusion	• Lecture • Discussion • Q & A
Day 3 0830 – 1030 1100 – 1300 1330 – 1530 (6 hours)	**Session 4** Briefing & Site Inspection – Cement Manufacturing Plant	At the end of the session participants will be able to gain the knowledge about cement manufacturing process, machinery and equipment involve and method to collect information on site.	Participants will visit cement manufacturing plant with the following sections: • Raw Material Preparation • Raw Material Homogenization • Raw Material Drying-Grinding • Pryroprocessing • Cement Production Process • Cement Packaging	• Breifing • Site Visit
Day 4 0830 – 1030 1100 – 1300 1330 – 1530 (6 hours)	**Session 5** Briefing & Site Inspection – Dairy Product Processing Plant	At the end of the session participants will be able to gain the knowledge about dairy product process, machinery and equipment involve and method to collect information on site.	Participants will visit dairy product processing plant with the following sections: • Raw Milk Collection and Reception • Raw Milk Processing • Milk Product Packaging	• Breifing • Site Visit

Date/ time	Session	Session Objective	Session Content	Methodology
Day 5 0830 – 1030 1100 – 1300 1330 – 1530 (6 hours)	**Session 6** Briefing & Site Inspection – Information Technology (Data Center)	At the end of the session participants will be able to gain the knowledge about the components and equipment involve in the data center and method to collect information on site.	Participants will visit all the components and equipment in the data center with the following sections: • Data Center Room ○ Servers ○ Routers ○ Switches ○ Computers ○ Firewalls ○ UPS ○ Cooling Devices – Air Conditioning System • Power Supply Room ○ Transformer, Switchboard, Generator Set • Fire Supperession Systems • Security Systems	• Breifing • Site Visit

Objective

This publication is for reference by the TAQEEM Machinery and Equipment Valuation Training Programme only.

The objective of this publication is to provide briefing notes and instructions to perform ME valuation as part of an integrated project to complete this course.

For further information, please contact:

DIRECTOR
NATIONAL INSTITUTE OF VALUATION (INSPEN)
VALUATION & PROPERTY SERVICES DEPARTMENT
MINISTRY OF FINANCE MALAYSIA
Persiaran INSPEN
43000 Kajang, Selangor
www.inspen.gov.my

INTEGRATED PROJECT ME 405

1.0 Introduction

This Integrated Project (IP) is an exercise to test the knowledge of participants in machinery and equipment valuation. It is also designed to provide practical experience in conducting the inspection processes, principles, and rules to be adhered to, collection of information and comparables, enquiries with respective manufacturers, suppliers, contractors and other relevant data providers, methods of valuation and report writing.

In this module, participants are required to provide the machinery and equipment valuation reports from the large-scale or specialized industries available in the Kingdom of Saudi Arabia. This is to ensure that each participant can apply the procedures of conducting the inspections and prepare complete machinery and equipment valuation reports based on what they have learnt from previous modules. This module also enables TAQEEM to measures the level of competencies achieved by the participants to qualify as fellow members in machinery and equipment valuation discipline.

The following table lists the main industrial sectors and activities found in Saudi Arabia, from which machinery and equipment valuation reports can be prepared as required by this module.

Volume	Sector	Industrial Activities
1	Mining	• Crude Petroleum and Natural Gas • Oil Refinery • Phosphate Mining • Aluminium Processing
2	Manufacturing	• Automotive Industries • Electronic Industries • Building Materials Industries • Food Industries ➢ Dairy Product ➢ Bakery Factories ➢ Food Packaging
3	Construction	• Cement Production • Steel Production
4	Transportation	• Airport • High Speed Train • MRT

Volume	Sector	Industrial Activities
		• Port
5	Communication and Information Technology (IT)	• Information Technology (IT) – Communications • Information Technology (IT) - Data Center
4	Services	• Healthcare
5	Agriculture	• Poultry Industries • Abattoir - Slaughterhouses
6	Utilities	• Power Plant • Water Desalination Plant • Sewage Treatment Plant

Participants will be placed in groups of three participants. Each group is expected to select 3 industrial sectors in the table from which they will carry out all machinery and equipment valuation processes and come up with three valuation reports.

In this module, there are three examples of industries that have been selected as case studies. These case studies below will be discussed in details:

i. Valuation of Cement Industry Manufacturing.
ii. Valuation of Dairy Products Factory.
iii. Valuation of Information Technology Equipment (Data Center).

2.0 Objectives of Integrated Project

At the end of the course, participants will be able to:

- Apply the concepts, principles, techniques, and academic knowledge in ME Valuation gained from ME 401, ME 402, ME 403 and ME 404.
- Display a teamwork effort in solving the ME valuation problem.
- Prepare and present machinery and equipment valuation reports in compliance with the requirements of the current International Valuation Standards (IVS) and TAQEEM's Code of Ethics and Conduct of the Valuation Profession.

ME 405

Advanced Level 2: Applied Machinery and Equipment Valuation – Integrated Project

VALUATION OF CEMENT MANUFACTURING PLANT

TABLE OF CONTENTS **PAGE**

1.0 Valuation of Cement Manufacturing Plant

1.1 Introduction

The cement industry is one of the most important industries in Saudi Arabia. Saudi Arabia is the top cement producer in the GCC, with large deposits of limestone and low costs of fuel, which makes the country ideal for cement production. In the Kingdom, there are eight publicly listed cement companies which have dominated the cement sector decades. They benefited from nominal mining fees and cheaper fuel.

The outlook of the Saudi cement sector has always been bright because cement is the main ingredient in the development of massive infrastructure from the KSA government's investment drive. Saudi Arabia boasts a booming construction industry with significant annual industry output. The country is also the largest market for the construction work in the Middle East, ahead of Iran, Turkey and other neighbouring Gulf countries. Hence the demand for cement, which is the essential component in construction activities, is inevitably high in Saudi Arabia. In terms of volume, Saudi cement industry exhibited a production capacity of 55, 700 kilo tons in 2013, and it is expected to reach 78,258.00 kilo tons by 2020. The country itself is guided by the policy of large-scale infrastructural development, which has significantly helped its construction industry. Rapid urbanization, infrastructural development, and increasing demand for commercial and residential construction are identified in the report as primary factors propelling the Saudi Arabia cement market. Major factors and initiatives that might support Saudi cement industry include one million housing construction by 2022 through Sakani program and the $500 billion NEOM city development bordering Red Sea.

The cement market in Saudi Arabia will also benefit from the expanding tourism which will correspondingly boost new construction activity in the country. Some of the leading players in the Saudi Arabia cement industry profiled in the report include Saudi Cement Company, Southern Cement Company, Yamama Cement Company, Yanbu Cement Arabia Cement and Najran Cement Company.

2.0 Cement Production in Saudi Arabia

Cement is one of the elementary material components in the construction industry. The Saudi cement sector has been weighed down over the last couple of years because of the economic slowdown stemming from decreased oil revenues. The cement sector is significantly dependent on the construction market as it plays a pivotal role in the development, renovation, maintenance, and repair of building structures. As the pace of mega-projects began to steadily

decrease after years of significant growth, demand for cement declined while the stocks gradually grew to record amounts. The construction sector is more susceptible to volatile swings compared to other economic activities as a contributor to GDP.

The construction boom in the Kingdom contributed to record cement and clinker production to keep up with the pace of contract awards. However, as the rate at which mega-projects were awarded declined, demand for cement began to precipitously drop. The decline in mega-projects coupled with the reduction in energy subsidies, which increased transportation costs, impacted the profitability of local cement producers. To produce cement, clinker is ground with added active ingredients such as gypsum into a fine powder. Storing cement for long periods decreases quality and strength, making clinker the preferred storage method. Cement production decreased from 57.2 million tons in 2014 to 42.2 million tons in 2018, marking a 26 percent decline. Clinker production dropped from 57.4 million tons to 48.3 million tons during the same period, resulting in a 16 percent decline.

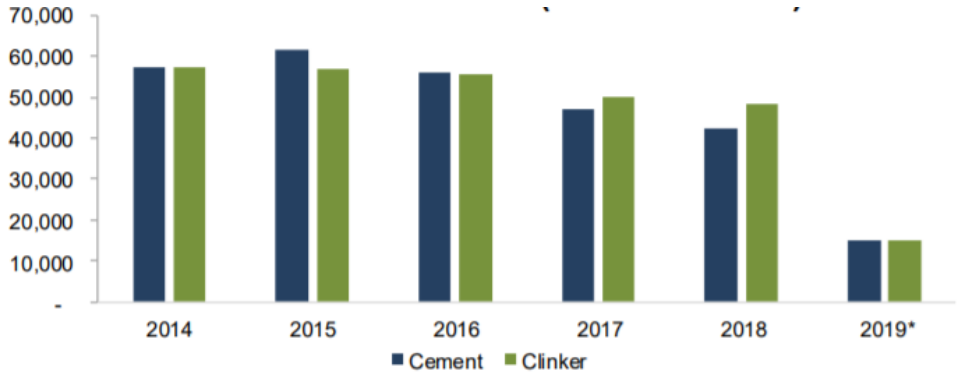

*Through April 2019
Source: Yamama Cement Company

Figure 1: Local Production (Thousand Tons)

While local cement sales have decreased over the last few years there have been encouraging developments thus far in 2019 that support cement companies. Local cement sales in 2014 reached 56.6 million tons but decreased to 41 million tons in 2018, marking a 28 percent decline. However, for the first four months of 2019, local cement sales reached 14.6 million tons. While the pace is slightly below 2018's there are signs that the drop in 2019 indicates sales are bottoming out with the chance of recovering as early as 2020.

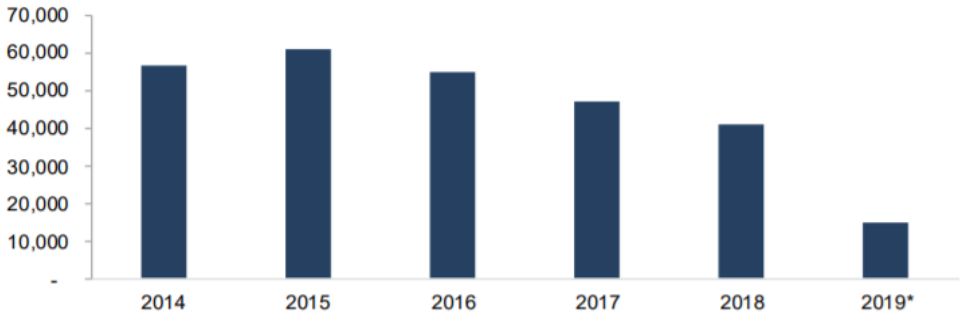

*Through April 2019
Source: Yamama Cement Company

Figure 2: Local Cement Sales (Thousand Tons)

Local cement companies have benefited from improved cement prices which have elevated their profitability thus far in 2019 even though demand has remained relatively flat. Cement companies, in absence of robust demand have focused on higher prices rather than maintaining market shares. Market insights indicate prices will remain elevated in 2019 regardless of subdued demand. The average price of a 50kg bag of cement climbed to SAR 13.16 in April 2019 after yearly declines from 2014 until 2018.

To alleviate slower sales, the Ministry of Commerce and Investment (MCI) lifted an 8 years export ban on cement companies in 2016. The export ban stemmed from high demand for cement locally as well as low inventory levels. The cement export tariff was originally set between SAR 85-SAR 133 per ton. In 2017 the MCI revised the export tariff by half to SAR43-SAR67 per ton. However, further accommodations were made in 2018 to scrap all cement export tariffs to reduce growing inventory levels. Consequently, exports of both cement and clinker significantly increased in 2018 and are on pace to grow even further in 2019. Exports of clinker through April 2019 have reached 2.6 million tons compared to 3.2 million tons in all of 2018.

While the cement sector has experienced tough market conditions over the last several years, the lifting of the export ban, increases in the prices of cement, and the volume of contracts on the horizon provide positive momentum ahead. There are several factors that will enable the cement sector to rebound in the coming year and beyond. The government's budget for 2019 calls for SAR 246 billion or a 20 percent increase in capital expenditures compared to 2018. This is a positive step for the cement sector as the government has earmarked increased spending across the Kingdom's infrastructure, health, education urban development, and transportation sectors. The construction of roads, bridges, hospitals, schools, and civil buildings will necessitate the usage of cement and in turn decrease the excess inventory currently stockpiled with companies.

Based on the regional segmentation of Saudi cement market into Central, Eastern, Western, Northern, and Southern regions, the regions of West and Central Saudi Arabia have so far held the dominant demand for cement. This factor is attributed to the greater rate of infrastructure development in these regions, coupled with a greater demand for residential construction projects. The eastern and southern regions follow in term of demand volume in the Kingdom of Saudi Arabia cement market. Northern Saudi Arabia currently holds a very low demand for cement.

3.0 Cement Manufacturing Process

There are two methods of manufacturing cement, namely the wet process and the dry process. Below are the stages of manufacturing cement by the dry process as follows:

i) Raw material preparation.
ii) Raw material homogenization.
iii) Raw material drying and grinding
iv) Pyroprocessing:
- Preheating and calcining unit
- Rotary kiln
- Cooler
- Fuel handling and firing

v) Cement Packing

The overall process flow for dry cement preparation is shown in Figure 3 below.

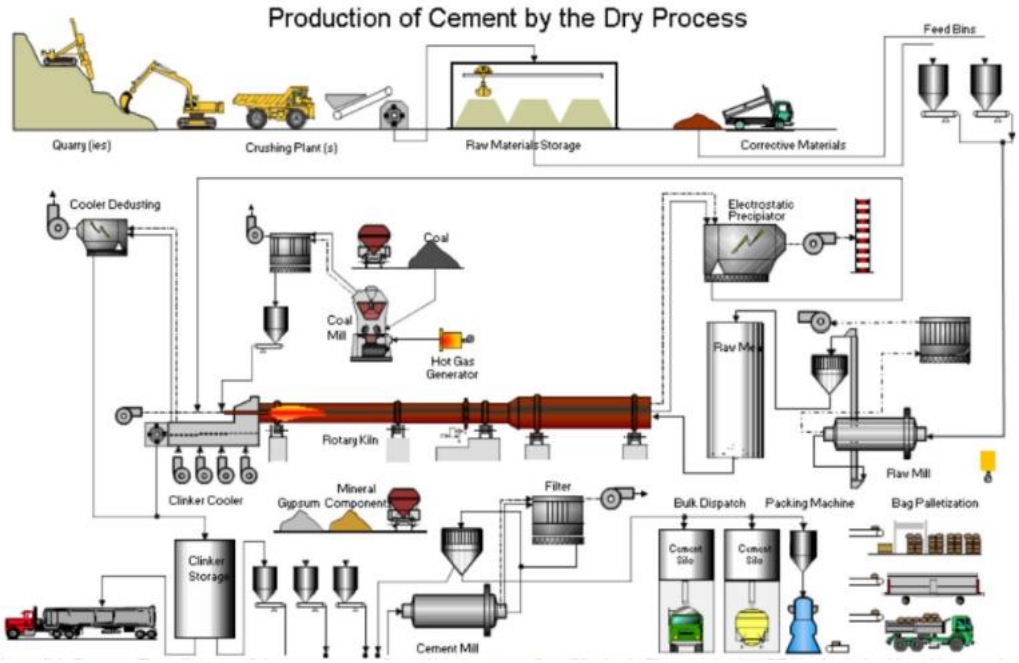

Source: www.cementequipment.org

Figure 3: Process Flow Diagram of The Cement Manufacturing Process

3.1 Raw Material Preparation

The production of cement is started from quarrying the raw material. The main raw materials are limestone, basalt, sandstone, pumice and gypsum. Site exploration of suitable deposits, for the raw material is carried out for the following reasons:

a) Verifying the quality of the raw materials.
b) Establishing the range of variation in quality of the raw materials throughout the working life of the deposit.
c) Verifying the workable reserves of raw materials.

Quarrying is the breaking of the rock in a safe and economical way and then transporting the resultant to a plant for further reduction in size.

Two main aspects to be considered for raw material investigation include:

a) Geometry of the raw material deposit, that means geological boundaries like interfaces of formations, faults and topography.
b) Quality of the rocks in terms of chemical and mineralogical composition, physical characteristics like hardness, abrasiveness, pozzolanic activity etc.

Quarrying of raw materials involves process of raw material extracting:

i) Mining and removal of overburden

A process of excavating and exploiting the raw materials underground for any use. Limestone for example, the key material can be mined in the quarries with compressed air drilling and subsequently blasting with explosives. Then, the mined limestone transported through dumpers or ropeways to the plant. Some of the machineries usage for blasting or ripping such as back acting/dragline excavator, rippers, bulldozer, etc.

ii) Drilling and Blasting

Drilling and blasting are the favoured combination for breaking out the raw material. Blast holes are drilled using drilling machines according to the desired length, diameter, spacing and geometric features. Blasting is the widely used method to excavate limestone for cement production as the rock is usually too hard to be ripped or dozed.

iii) Loading

Loading machines in the present technology is concentrated towards hydraulic excavators and wheel loaders. The machines used for loading in

open pit quarrying for solid rock such as excavators, hydraulic excavators, wheel loaders and others depending on the nature of the quarry.

iv) Haulage

Haulage comprises the transport of the fragmented rock pile material from the loading point to the crushing plant. The choice of haulage system maybe:

- By rail mounted vehicles
- By rubber-tired vehicles and other means such as belt conveyors, wheel loaders, etc.

The rock pile loaded to the loading machine is either fed to a primary crusher in the quarry, the product of which is further transferred to the cement works, or to heavy dump trucks to be transported to a crushing plant away from the quarry.

v) Crushing

Crusher is a device that is designed to reduce large solid chunks of raw material into smaller chunks. Crushers will be erected near to the limestone quarry site. The limestone and sandstone are transported from their respected quarry sites by means of dump trucks to the crushers, which directly pass the crushed raw material to the ropeway so that the size is reduced to 25mm. The crushed limestone is stored in the stockpile through stackers. There are many crushers used in cement industry such as:

- Impact crushers
- Hammer crushers
- Jaw crushers
- Gyratory and cone crushers
- Mobile crushers

vi) Site Restoration

Site restoration is required to be restored after any quarrying operation ceased on the site. The restoration involves restoring the landscape to something like its original status or to an environmentally friendly way and re-cultivation of the surrounding to create a biologically and ecologically intact natural habitat.

Most of the machineries involved in raw material preparation area include back acting excavators, dragline excavators, wagon drills, compressors, shovels, bulldozers, rail mounted vehicles, wheel loaders, dumpers, rippers, belt conveyors, etc.

Figure 4: Dragline Excavator

Figure 5: Machineries used in Quarrying

Figure 6: Belt Conveyor

3.2 Raw Material Homogenization

Homogenization of raw materials is carried out in pre-blending stores. With proper layout, all storages of raw materials can be operated as blending storages with varying efficiency. A cement factory stores piles of raw material which can last usually three to five production days, and raw meal silos for three to four production days. The ideal solution for limestone storage at cement factory is either chevron or windrow stacking method. Chevron method is

stacking in layers along a single axis with the feed conveyor sweeping backwards and forwards along the length of the pile. Windrow method is stacking in longitudinal strips side by side and then in successive layers; this avoids the segregation which characterizes chevron stacking.

Pre-homogenization is a unit operation to increase consistency of raw materials and solid fuel to ensure product quality and operational stability. Although modern technology and improved methodologies has greatly influenced to reduce inconsistency in raw materials through mine planning greatly facilitated by the introduction of Global Position System (GPS). However, the remaining material variations can be reduced more economically by pre-blending via staking and reclaiming.

The pre-homogenizing systems have two major operations:

i) Stacking

Stacking is receiving crushed material from the crusher plant. It consists of a movable carriage which moves on rails along the planned piles. Stacker belt goes over this movable carriage and drops material on a cross belt which reaches up to the centre of the stockpile. Pile thus gets built up in layers with hourly material variation distributed along the pile length to accomplish blending of material.

ii) Reclaiming of materials

Reclaiming of materials consists of a hoe or a rake which extricates crushed material in layers of small thicknesses. Extricated material falls on conveyor running across the width of the pile and drops it on a belt to respected feeding hoppers of grinding section. Thus, the hoe and conveyor also move on rails along the length of the pile. Speed of travel of carriage can be varied as required. Angle of hoe may also be adjustable to suit angle of repose of the material reclaimed from the pile.

The reclaiming of materials has two ways:

a) End Reclaim - Reclaimer scrapes an entire end face with a transverse scraper at floor level moving material to a discharge conveyor.
b) Side Reclaim - A boom mounted scraper working end to end along the side of the pile. This gives less effective blending and reclaiming rate is not constant.

The machineries involved in pre-homogenization of raw materials include liner stacker and end reclaimer, circle stacker reclaimer and cross-belt analyser.

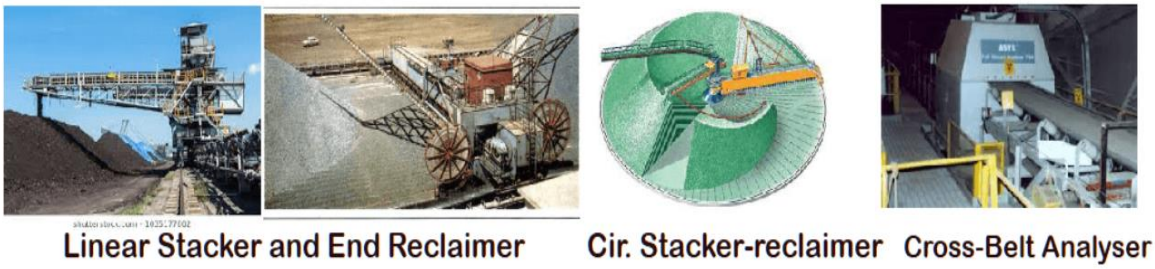

Figure 7: Pre-Homogenization (Stacking and Reclaiming) Machineries

Cross-belt analyser shown in Figure 7 is the technology which provides real-time online elemental analysis for the cement industries. They deliver fast, accurate elemental data with unmatched analytical stability and safety. The analysers are designed for industrial environments and readily interface to standard PLCs and common process control and quality control software.

Homogenization is a specific blending operation. Therefore, it is necessary to produce kiln feed of quality that is consistently uniform in chemical composition and particle size distribution. For cement plants of small capacities where pre-blending by staking-reclaiming was not a necessity, batch type blending (air merge-turbulent blending) to achieve a blending ratio of 10: 1 was enough to produce a consistent kiln feed. However, as the plant capacities grew bigger, batch type silos to contain a buffer stock of 2-3 days' (kiln feed) became unfeasible and the concept of continuous controlled silos of capacities as high as 15,000 to 20,000 metric tons started to evolve.

Modern designed controlled flow silos yielding a blending ratio of 3:5. Controlled flow silos may have multiple discharge points, or an inverted cone over a centre discharge within which the raw meal is fluidised. In controlled flow silos, blending is achieved by controlled flow of the contents of the silo. Moreover, it is recommended to have a preblending system (staking-reclaiming) and a regular analysis of from raw mill feed to augment blending of raw meal to consistent kiln feed for good quality clinker formation and stable kiln operation.

3.2.1 Homogenizing Silo (Raw Meal Silo)

This is an area where the raw meal is stored temporarily. It has two roles which are: **blending** and **storing.** Blending is an act of mixing or homogenizing of raw meal using compressed air to get uniform chemical composition and meal fineness.

In cement industry raw meal blending or homogenization is always done in silos. It is the last homogenizing step in the line of the raw mix preparation processes installed with the aim to reduce the residual (relatively short-term, high frequent) compositional variations observed for the raw meal produced in the raw mill.

The basic principle of blending process is one or combination of the following mechanisms:

- Distribution of input raw meal at the top of blending silo
- Pneumatic dry blending by aeration of raw meal with the aeration units placed at the bottom of the silo
- Segmental aeration with difference in the pressure of air supplied for aeration of various segments for mixing of raw mix.

Figure 8: Homogenizing Silo

3.3 Raw Material Drying-Grinding

At this stage, this process is also known as the process of raw mill. Drying of moisture in raw materials is required for effective grinding and subsequent handling of raw mill. This is achieved normally by ducting part of the kiln exhaust gas through the mill with inlet temperatures of up to 320°C. However, when starting from cold, when hot gases are not available from kiln, hot gas is provided by oil fired Hot Air Generators (HAG) in raw mill and coal mill.

The raw mix that is fed into the mill has to be dried and ground to the required product specification (normally 16% retained on 90 microns). This is accomplished by grinding equipment known as mills. Mills belong to a class of equipment that accomplish comminution of materials in the fine range.

The function of raw mill is to fulfils four main functions in one piece of equipment:

i) **Grinding**
The material is ground between rollers and grinding table while passing from the center of the table to the nozzle ring. The combination method belongs to the most efficient grinding processes applied in cement manufacturing.

ii) **Separation**
The ground and dried material is lifted up with the drying gases. In the separator, the too coarse particles (tailings) are rejected to the grinding table. The fines leave the mill and are conveyed to dust collector.

iii) **Drying**
The process air consists mostly of waste gas from a kiln or cooler or is supplied by a hot gas generator. Drying occurs during transport through the grinding and separating process stage.

iv) **Transportation**
The drying gasses are utilizing to serve as conveying media. The first transport stage is the internal circulation and the second is the separator. At last, the product is extracted from the separator and pneumatically conveyed to cyclones or a filter where the product is collected and fed to a silo. The clean gases are exhausted to the ambient and/ or re-circulated to the mill.

The working principle of raw mills uses pressure and shear generated between the rollers and rotating table to crush and grind limestone, basalt, and sandstone. The rotation of grinding table accelerates the materials toward grinding track and passes it under the roller. The ground material is supplied on to rotating grinding table connected to bevel spur gearbox which is driven by an electric motor or hydraulic drive.

There are three types of mills which are commonly used in cement plants for grinding raw mill:

i) **Ball Mills**

Ball mills with high efficiency separators have been used for raw material and cement grinding in cement plants. Ball mill is a cylinder rotating at about 70-80% of critical speed on two trunnions in white metal bearings or slide

shoe bearings for large capacity mills. Closed circuit ball mill with two compartments for coarse and fine grinding and a drying compartment with lifters are generally found in cement plants for raw material grinding. Compartments (filled with grinding media) are divided by a double diaphragm with flow control to utilize maximum mill length for effective grinding.

Grinding media contain balls of different sizes in designed proportions with large sizes in feed end and small sizes in discharge end. About 27 to 35 % volume of mill is filled with grinding media. Equilibrium charge is that charge where compensation for wear can be done by balls of one size only usually the largest size in the compartment. Grinding media could be made of forged steel, cast steel, or even cast iron. To economize grinding media consumption, presently high chrome steel balls used as grinding media

Mill shell is lined with lining plates to protect it from wear, high chrome steel liners are now commonly preferred to give longer life. Lifting liners are used to enhance impact in first compartment, where coarse grinding is dominated by impact. In second compartment which is longer in size, classifying liners are used to ensure media classification along the length of mill with large size balls near mid partition and smaller balls at mill discharge end.

Ball mills are either 'air swept' or of 'bucket elevator' type. In air swept ball mills, material is swept out of the mill by hot air /gas of significant velocity, through separator and coarse fraction is returned to the system for regrinding. In case of bucket elevator mills (gravity discharge mills), ground material is taken by conveyors to a separator where coarse was returned to the mill and fine sent to cyclone separator or bag filter for collection.

Different drive arrangement for ball mills are in existence. Commonly existing arrangement is mill drives with a girth gear and a pinion driven by motor with a gear box. Larger mills have a twin drive of half the ratings on either side of same girth gear. In central drive arrangement The gear box output shaft is directly connected to mill.

Closed circuit ball mills are existing with all types of separators grit, mechanical and high efficiency in cement industries. Presently high efficiency separators are commonly used to achieve maximum energy optimization.

Primary ball mill controls are:

- Mill drive power or mill differential pressure to control mill feed rate.
- Mill sound level to control filling level inside mill with feed rate.
- Inlet gas temperature.

- Outlet gas temperature.
- Outlet gas flow determined from mill inlet and outlet drafts or flow meters installed.

Figure 9: Ball Mill

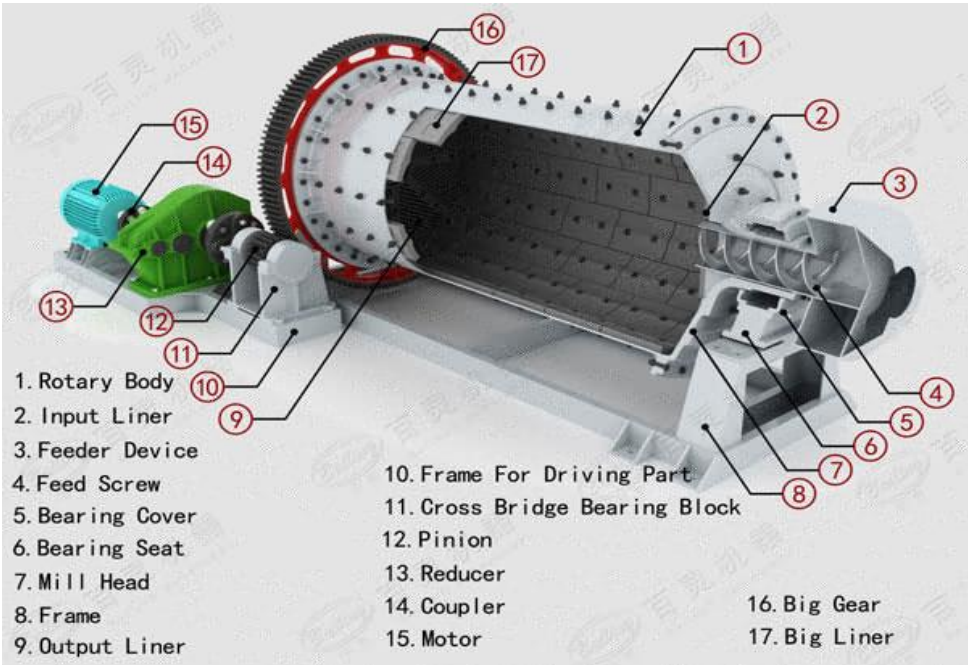

Figure 10: Components of Ball Mill

ii) Vertical Roller Mills (VRM)

In a vertical roller mill, 2 - 4 rollers (lined with replaceable liners) turning on their axles press on a rotating grinding table (lined with replaceable liners) mounted on the yoke of a gear box. Pressure is exerted hydraulically. This mill also has a built-in high efficiency separator above the rollers to reduce

circulation loads and consequently reducing differential pressure across the mill. It also has an annular ring which admits air at velocity as high as 85 m/sec. Feed material is directed onto the centre of the table and is thrown outward by rotation under the rollers by centrifugal action. Material gets partially ground and as it falls over the edge of the table, where it is picked up by hot air /gas, and is separated into coarse fraction falling back on grinding table and fine fraction is carried with air to product collector.

The mill is started either with the rollers in lifted-up position, or with the hydro-pneumatic system at low pressure. In grinding mode, actual metal to metal contact should be prevented by limit switches or a mechanical stop and by consistent feed. In VRMs the material cycle time is usually less than a minute against several minutes for a ball mill or tube mill. Thus, control response should be accordingly faster. In case mill feed fails action should be taken within no more than 45 seconds or excessive vibration will cause mill shut-down. Moreover, the vertical mills are subject to vibrations if material is too dry to form a stable bed. Therefore, provision is made for controlled spray water inside the mill During mill operation magnetic separator and metal detector should be always functional to ensure to exclude tramp metal which can damage the grinding surfaces.

Primary roller mill controls are:

- Mill drive power or mill differential pressure to control mill feed rate.
- Inlet gas temperature.
- Outlet gas temperature.
- Outlet gas flow.

A few countable salient features of vertical row mills:

- They are air swept mills, therefore has a higher drying capacity to handle an aggregate moisture of up to 20% on raw materials.
- Space needed for vertical row mill is much less than a closed circuit ball mill of same capacity.
- As separator is integral part of the mill itself, the number of auxiliary equipment are less.
- Total power consumption for grinding circuit as a whole is also less by about 30% compared to closed circuit ball mill in spite of higher fan power.
- Feed size can be as large as 75 to 100 mm. Feed size can be as large as 5% of roller diameter.

Figure 11: Vertical Roller Mill (VRM)

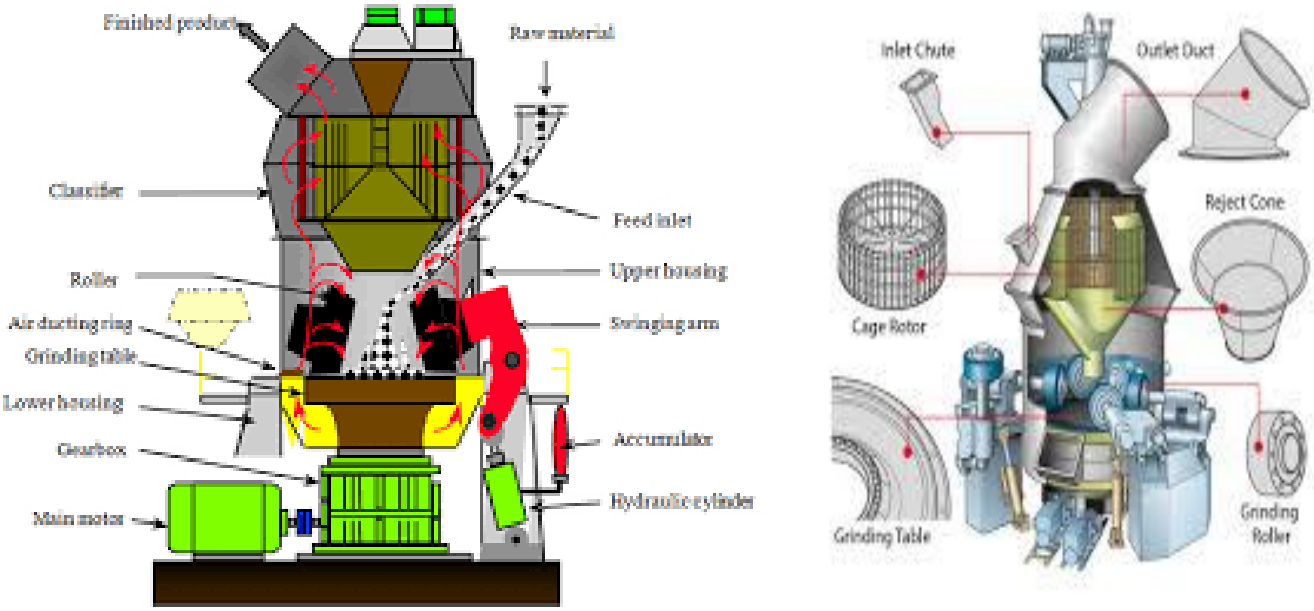

|010igure 12: Component of Vertical Roller Mill (VRM)

iii) Roller Press.

Roller press consists of two rollers lined with wear resistant material. One roller is fixed and the other one is movable to exert pressure, applied hydraulically. A roller press looks like a roll crusher. However, the pressure exerted between rollers is very high - of the order of 400 kg/cm2 as compared to roll crushers. Feed is fed over the total width of the rollers by

a central chute. About 30% material gets pulverized to the required product fineness. Pressed material comes out as cake. This cake is divided into middle fraction containing more fines and coarse end fractions. End fractions are sent back to the roll press for re-crushing.

There are various ways in which the roller press can be used in the system:

a) **As a pre-crusher in open circuit**.
   Roller press cake is fed to a ball mill operating in closed circuit. Mill separator circuit is the usual dry closed-circuit grinding system. However, mill is much smaller in size and larger grinding balls are no more required.

b) **In 'hybrid' grinding circuit.**
   In it both the roller press and the mill operate in closed circuit. Output from roller press is sent to a classifier and coarse fraction returned to it. Thus, end fractions are collected separately and fed back to roll press and only the middle fraction is sent to mill for further grinding.

c) **Using press only as standalone pressing and grinding unit**.
   In this circuit, middle fraction is sent to a disagglomerator through which hot gases are passed for drying. Disagglomerator material is passed to high efficiency separator which returns a coarse fraction back to roller press for regrinding.

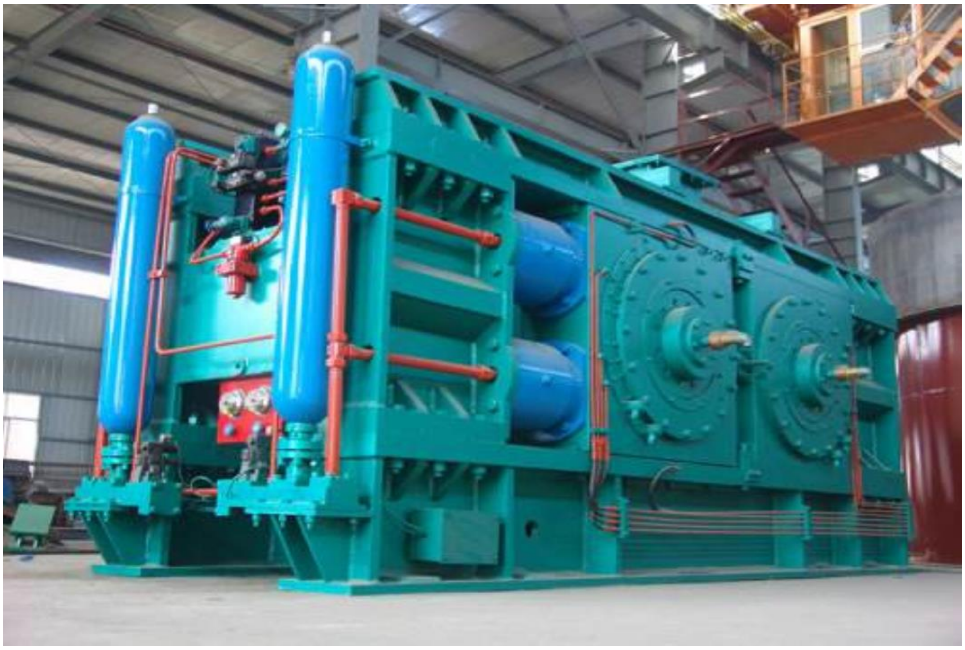

Figure 13: Roller Press Machine

3.3.1 Bag House Filter

The bag filters are important equipment in cement factory. In these filters current flow that includes gas and dust cross through the pores which are in the stuff filter and filtrate by remaining on the bag. Afterward, by dust increase on the bag, the filter is shaken until dust collecting leads to exit hopper. This system in the project is called mechanical method. They are used extensively in cement works for cleaning the exhaust air from tube mills, crushers, material handling installations, silos and bins and dispatch loading plants. Since an accumulation of dust on the pores of the fiber occur, cleaning of the filter media is necessary. Bag house (Bag Filter) is an air pollution control device that removes particulates released from cyclone by using induced draft fan.

Figure 14: Bag House Filter

3.3.2 Gas Conditioning Tower

Conditioning towers in the cement industry are used for cooling exhaust gases from the kiln before they are conveyed to the bag house. Inlet temperature from pre-heater to gas conditioning tower is 600 degree Celsius and outlet is 250 degree Celsius. This temperature is used to drying material in vertical raw mill.

The hot exhaust gases enter the top section of the vertical, cylindrically shaped and insulated tower for cooling by water injection. The gases are drawn through the conditioning tower by a fan.
Additional use of the gas conditioning tower is to condition and cool kiln gas before it is de-dusted in bag house. The cooling of the gas protects the bag from high temperatures and the higher humidity of the gas increases the performance of the bag house. Furthermore, some of the dust in the kiln gas is separated from the gas by gravity in the gas conditioning tower.

Figure 15: Gas Conditioning Tower

Hot gas generators are suitable for drying process and used in conjunction with grinding plants when there is insufficient hot gas from conditioning tower. In this process air is heated under high pressure.

Figure 16: Hot Gas Generator

3.4 Pyroprocessing

It is a process of heating of the raw meal to the required temperature to produce the desired clinker compound in an economic way at higher productivity in the preheater and kiln. It is also a process to convert natural mineral to hydraulic mixture using high temperature.

In order to obtain clinker from a properly proportioned, grinded, and homogenized raw meal, it must be treated with heat obtained from burning fuels. The main processes and chemical reactions that take place during clinker formation include:

i) Evaporation of free water
ii) Evolution of combined water in the argillaceous (containing clay) components.
iii) Calcinations of the calcium carbonate (CaCO3) to calcium oxide (CaO).
iv) Reaction of CaO with silica to form dicalcium silicate.
v) Reaction of CaO with the aluminium and iron-bearing constituents to form the liquid phase.
vi) Formation of the clinker nodules.
vii) Evaporation of volatile constituents (e.g. sodium, potassium, chlorides and sulfates)
viii) Reaction of CaO with dicalcium silicate to form tricalcium silicate.
ix) Cooling of clinker.

These reactions are combinations of endothermic and exothermic reactions. The pyroprocessing unit consists of:

- Preheating and calcining unit
- Rotary kiln
- Cooler
- Fuel handling

3.4.1 Preheater

Preheaters are fabricated cyclones and connecting gas riser ducts. Preheaters are essential parts of the preheater tower. It can be considered as a heat transfer tower supports a series of vertical cyclone chambers through which the raw material passes on the way to the kiln. To save energy modern cement plants preheat the raw material before they enter the kiln. Rising more than hundred meters, hot exit gases from the kiln heat the raw meal as they swirl down the cyclone string.

The advantages of the preheater system are as follows:

- It can raise the yield of the kiln significantly
- It can ease the kiln burning zone of thermal load, because of prolonging the service life of the lining and raising the running rate.
- It is advantageous for the stability of burning schedule.
- It is easy to burn the inferior coal with low heat loss per clink.
- For raw material and fuel containing high alkali, chlorine and sulphurs, its orientation ability is strong.
- It is exhausts lower content of NOx in the waste gas and the pollution of the environment s comparably small.
- Benefit the technique reform of the old kiln, cover small area, needs low equipment expenses and the yield can become to duplication.

All modern cement kilns are equipped with suspension preheaters. Preheater system is composed of cyclone, duct, chute, calciner and kiln inlet hood, etc.

Figure 17: Preheater

Stages

Cyclone preheater kilns can have many stages ranging from one and six, having increasing fuel efficiency with more cyclone preheater stages. The feed to the kilns is delivered to the top stage of the preheater and passes down through the successive stages of the preheater to the pre-calciner and rotary kiln.

The more preheater stages the lower the thermal energy consumption of the kiln as more heat from the kiln exhaust gases is recovered. Preheater exit gas temperature is reduced by ~30ºC for each additional preheater stage, from ~360ºC for a 4-stage preheater, to ~330ºC for a 5-stage preheater. Today, five stage preheaters represent the economical and optimum between investment costs (structure height, foundation), pressure drop and heat consumption to ~330ºC for a six stage preheater. Nowadays there are 7 stage preheaters in the market. Pressure drop is also very important for process savings. In the preheater tower at a cement industry for example, a reduction in pressure drop is fundamental for reduction in the cost of cement where each kcal of energy saved per kilogram of product plays an important role in the success of the cement plant.

When the number of preheater stages is decided, the important considerations are made on the following:

- Raw material moisture (i.e. drying heat requirements)
- Cost of thermal energy
- Cost of electrical energy
- Gas handling system
- Soil conditions (foundations, earthquake zone as related to the height of structure or tower)
- Capital cost required to build the tower

The higher the moisture content of the raw materials the more heat is required in the preheater to dry the raw materials in the raw mill. If the raw materials have ~ 8% moisture, then 4 stage preheater system is the maximum that can be installed for the preheater exhaust to dry the raw materials in the raw mill.

Number of Strings

The preheater system is composed of a double-string preheater and in-line calciner. Fuel and preheated raw material in the calciner are taken by high-speed air current, suspended inside the stove, go upside in spiral flow and get fired and resolved at the same time in both strings. The combustion of the fuel gives out heat and the raw material absorbs heat to decompose. These two processes happen rapidly at the same time in suspended mode.

The number of strings of cyclones is generally related to the plant's capacity requirements. Mostly, the system encompasses one or two strings, but more can be added for large plants. A transition from one string to two relates to the size of the cyclones and the resultant volume of the preheater construction.

Cyclone

The key component of the gas-suspension preheater is the cyclone. A cyclone is a conical vessel into which a dust-bearing gas-stream is passed tangentially. This produces a vortex within the vessel. The gas leaves the vessel through a co-axial “vortex-finder”.

Each stage of the preheater consists of a gas riser duct and a collection cyclone. The raw meal is led into the riser duct of the first stage cyclone and the intake has a spreader box for distribution of the raw meal in the gas stream. The exhaust gas is drawn out of the rotary kiln and up through the gas riser ducts of the preheater. The rising gas lifts the feed up through the gas riser ducts and into the collection cyclones where the swirl created by the geometry of the cyclone and the central dip tube separates the feed from the gas. Gas exits the cyclone up the preheater through the dip tube, while the cyclone passes the feed down the preheater to the next stage.

The size of the cyclone preheater is determined by the following factors:

- Separation efficiency
- Pressure drops
- Part load operation capability
- Size of the preheater
- Cost of the project.

The size of cyclones relates to the maintenance of desired gas velocity criteria and efficiency. Increasing the preheater cyclone dimensions reduces the pressure drop. But for any given cyclone geometry, stable preheater operation (without raw meal failing through the riser ducts) requires a certain minimum gas velocity. The cyclone should be equipped with the following:

- Dip Tubes (also called “immersion tubes”, “thimbles” or “vortex finders”)
- Meal flaps
- Splash boxes (or splash plates)

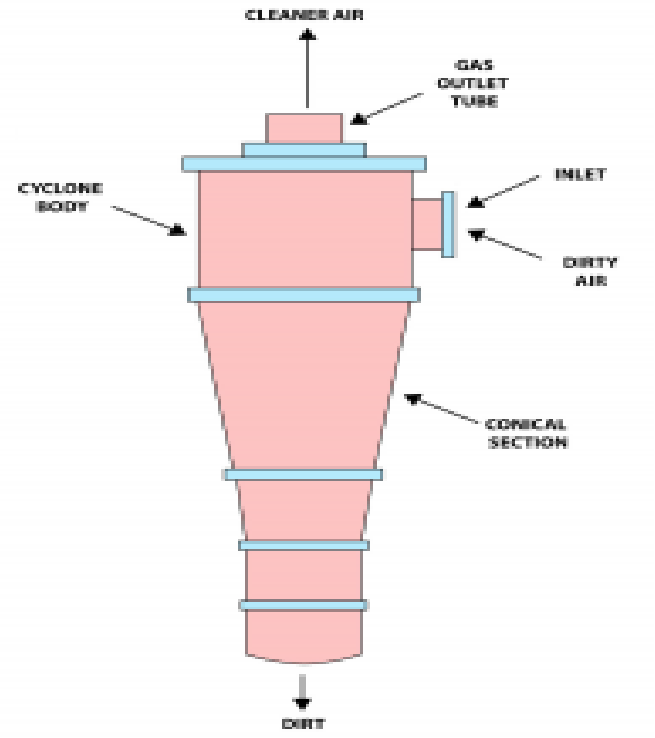

Figure 18: Cyclone

Air Cannon

Air cannon is pneumatic, bulk material moving system that quickly releases compressed air into a storage vessel to restore flow to material, that is:

- Clinging
- Bridging
- Rat-holing
- Arching.

Compressors are also used for air blaster in preheater system to clean blockages caused by collections of material in cyclones and ducts.

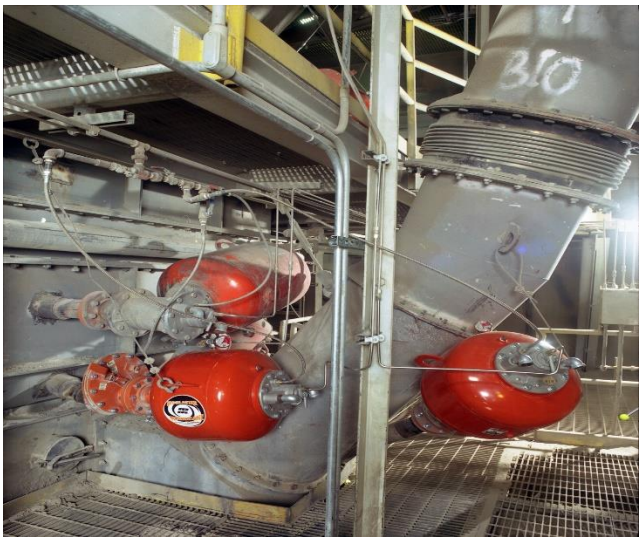

Figure 19: Air cannon

Precalcining system:
An additional thermal efficiencies and productivity gains can be achieved by diverting some fuel (60-65%) to a calciner vessel at the base of the preheater tower. This system is called the preheater- precalciner process.

Production capacity is a function of the volume of the rotary section of the cement kiln. As capacities of long kilns and preheater kilns is raised the length and diameter of the rotary sections of the kiln will be increased. With all the fuel fired at the front of the kiln and thermal load on the refractories at the front of the kiln are increased linearly with the production capacity. Thermal load is a function of the thermal energy input per hour and the cross-sectional area of the kiln. Kiln linings with sufficient refractoriness to withstand the burning zone thermal loads involved were no longer made available, precalcination was therefore introduced to overcome the problem.

3.4.2 Rotary Kiln

The rotary kiln is a long steel cylinder, slightly inclined furnaces, lined with refractory material to protect the steel shell (due to its extremely high temperature) and supported by steel tires and rollers. It rotates along its longitudinal axis, driven by a pinion and gear system. It is also a type of high temperature oven used for clinker burning process. The raw material mix is charged into the kiln at the elevated end but the combustion fuels fired at the lower end of the kiln.

The materials are continuously and slowly moved to the lower end due to the inclination and rotation of the kiln. The raw materials are converted into cementitious or hydraulic minerals as a result of the increasing temperature within the kiln.

It has ubiquitous fixtures of chemical process that involves different chemical reactions and it can handle feed stocks of different particle size distributions or whose physical properties change significantly during processing, while the long process time of the material within the kiln brings about uniform product quality.

The types of kiln include the following:
- Wet process kilns (usually long kiln)
- Grate preheater kilns
- Cyclone preheater rotary kiln
- Preheater-Pre-calciner kiln.

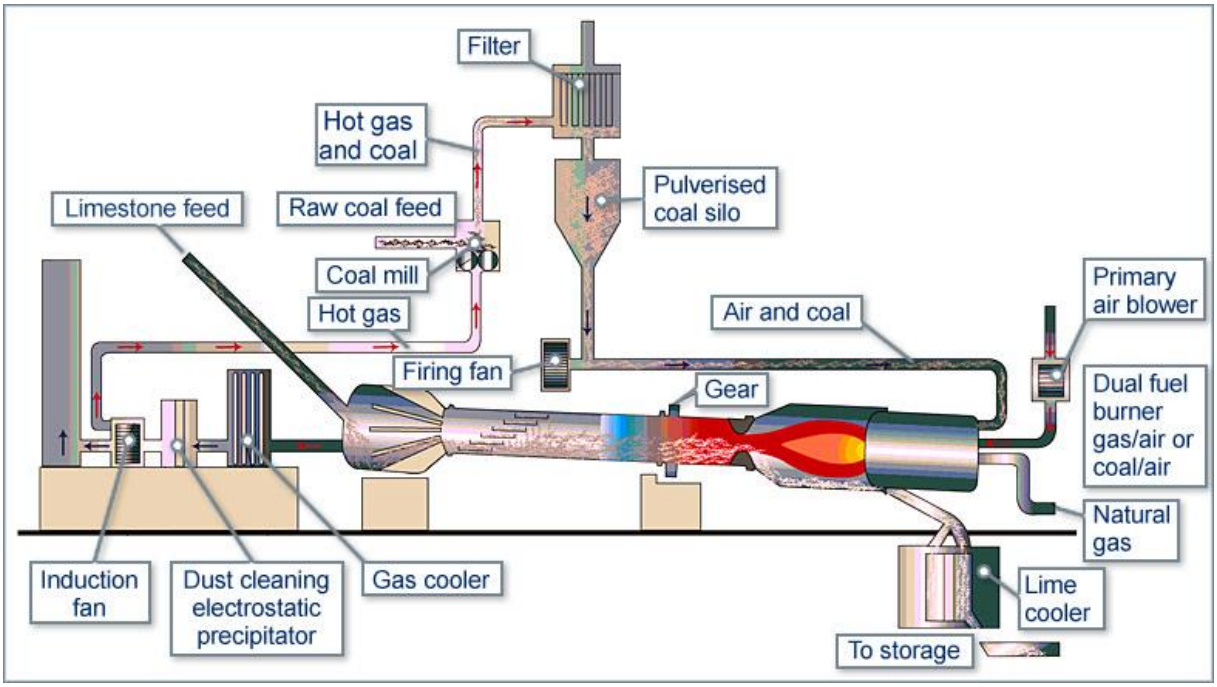

Figure 20: Rotary Kiln Illustration

Figure 21: Rotary Kiln

The components of kiln feed system are briefly discussed below:

i. **Kiln Feed Bin**

A mixing bin with a capacity of half to one-hour kiln feed, mounted on load cells, fitted with level switches, to maintain a constant head

(pressure/level) of raw meal inside bin in order to ensure that there are no fluctuations in the rate of discharge due to change of head/level of material. In addition to provide a constant head and a mixing purpose, kiln feed bin mounted on load cells is of pivotal importance to calibrating the metering system and checking kiln feed rate (t/h) in order to monitor and record production counters with accuracy.

ii. Kiln feed metering

Most modern cement plants have an indirect weighing system like solid flow meter, rota-scale etc. with a dosing gate as a prefeeder to feed kiln within a tolerance range of ± 2 %. However, standalone volumetric system (like screw feeder) and gravimetric system (like weigh feeder) feedings are still fitted on some plants as well.

iii. Feed Elevator

Most new plants, kiln feed is normally conveyed by bucket elevator into the preheater to minimise power consumption. Previously 'air lift' was commonly used for conveying kiln feed to preheater top, this system needed de-aeration before injection, otherwise the air entrained could consume kiln ID fan load capacity and reduce kiln capacity significantly.

iv. Rotary Feeder

A rotary feeder passing kiln feed to a chute connected to preheater is installed to avoid cold air leakages into the preheater tower. A slide gate, pneumatically/electrically operated is always provided to isolate preheater (Hot gases) when feed is stopped or diverted to recirculation.

3.4.3 Coolers

In cement manufacturing, formation of clinker nodules occurs at the entrance to the hottest part of the kiln with a material temperature of around 1280ºC. The clinker is preferably in the form of 10 mm to 25 mm size nodules that exit from the front end of the kiln into the cooler. It is critical that cooling of the clinker is rapid to secure a phase composition that has adequate cementitious properties. It is equally important that the heat exchange between clinker and air is efficient to ensure proper cooling and at the same time maximize the recovery of heat to secondary air, tertiary air and the related process requirements.

At the discharge end of the kiln, the clinker is red hot and contains around 1.0 million Btu per short ton thermal energy. The clinker is also to some extent still reacting chemically toward the creation of various clinker minerals. The purpose of the clinker cooling is to recoup some of the heat in the clinker, thereby making it cold enough to handle. We also want to stop the chemical reactions in the clinker at the point favourable to the cement quality.

Cooling of clinker takes place at two locations:

- In the kiln after the material passes the burning zone region; and
- In the specially designed clinker coolers after the material falls out of the kiln.

The rate of cooling can be critical to the clinker quality and performance of cement. The rate of cooling in the kiln is determined by the flame and resultant heat flux, flame temperature and speed of material flow through the kiln. As the clinker temperature in the kiln is normally 1200ºC to 1250ºC, the clinker characteristics are largely established before the clinker enters the cooler. A long flame gives slow heat-up and slow cooling of the kiln charge before it falls from the kiln.

Type of clinker coolers are:

i) Planetary coolers
ii) Rotary coolers
iii) Shaft coolers
iv) Grate coolers

Figure 22: Planetary Cooler

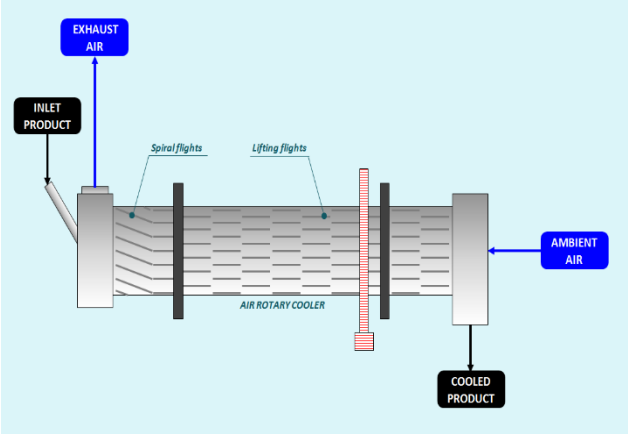

Figure 23: Rotary Cooler

Figure 24: Shaft Cooler

Figure 25: Grate Cooler

3.4.4 Fuel Handling and Firing

Clinker process is an endothermic (heat absorbing) process and it requires burning of suitable fuel. Almost 40% of the total cost spent in manufacturing cement goes to fuel and power. The specific heat consumption of modern plant ranges 690 to 800 Kcal/kg of clinkers.

The purpose of firing in kiln is to convert the latent heat in the fuel to free heat and to transfer this heat to the charge in the kiln. In the cement industry, coal, fuel oil and natural gas are the fuels used for combustion commonly. Optimum rate of combustion is achieved by appropriate time, temperature and turbulence.

Pyro process requires burning of fuel at two locations:

- Kiln – High grade heat
- Precalciner -Low grade heat

Types of fuel

- Coal: Coal of Sub-bituminous category is mostly used
- Fuel oil: Oil is mainly used as start-up fuel
- Gas: Gas firing is very rare
- Alternate Fuels; Saw dust, Used tyres and other wastes are also used nowadays

3.4.5 Material Transportation System

There are at least six means of material transporting system from section to section in pyroprocessing such as:

i) Deep Drawn Pan Conveyor

This pan conveyor type is the ideal direct connection between cooler and clinker stock especially for application with ETA coolers. The design allows the pan conveyors to be arranged underneath the whole cooler length and collect the fines from the dust collecting hoppers same as the clinker from the crusher. The cold clinker is output from the eta cooler then transported by deep pan conveyor and stored in clinker silo.

Figure 26: Pan Conveyor

ii) Belt Conveyor

The main material transporting system consists of belt conveyor. The belt conveyor transporting system for raw materials like limestone, gypsum and sand are naturally found at the main plant for facilitating raw material storages.

Figure 27: Belt Conveyor

iii) Bucket Elevator

Bucket elevator is one of the popular transporting system in cement manufacturing. They are mostly used where belt conveyors cannot work.

The fast running bucket elevators can handle and withstand temperatures of up to 350ºC. Bucket elevators are used for:

- Transporting materials from cement mill to air slid.
- Transporting materials from air slid to cement silo.
- Transporting materials from air slid to packer machine.
- Transporting materials from drag chain output and air slide output to raw meal silo
- Transporting materials from cement air slide output to cement silo.
- Transporting materials from homogenizing silo to preheater.

Figure 28: Bucket Elevator

iv) Drag Chain Conveyors

Drag chain conveyors are used for moving bulk materials at horizontal or inclined position. Drag chain conveyors can withstand temperatures of up 350ºC to 400ºC fitted with special chains. Drag chain conveyors have a dust-tight casing of steel plates. In addition to the outlet at the drive station, the conveyor can be fitted with hydraulically operated slide gates at points along the casing. These types of transporting systems have the same mechanism drive and drive structure. The only difference is that the drag chain conveyor transports relatively coarse materials whereas trough chain transports material usually very fine materials are into the air slide.

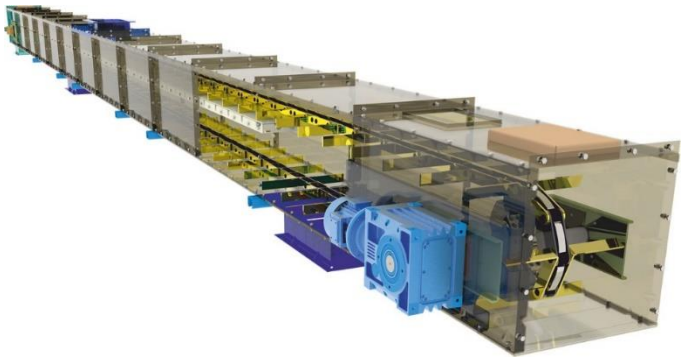

Figure 29: Drag Chain Conveyor

v) Air Slides

Air slide transporting system uses air blown by blower fans just below a material holding industrial cloth which is known as martin cloth. Raw meal and cement are conveyed via the air slide by means of blown air vibrating the martin cloths.

Air slide is used to transport:

- From raw meal cyclone output to raw meal bucket elevator.
- From cement meal cyclone output to cement meal bucket elevator.

There are six air slide transporting materials or products from cement silo to cement bucket elevator.

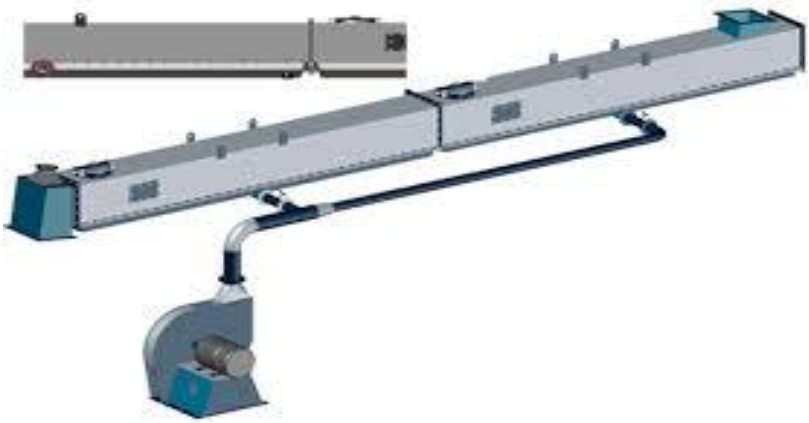

Figure 30: Air Slide Conveyor

vi) Screw Conveyors

Screw conveyors are used for horizontal, inclined, or vertical transportation of bulk and granulated materials. Screw conveyors are designed for inclined transportation of materials with temperatures below 300 ºC. This type of conveying mechanism is selected specially for

materials which appears be semi-wet. Usually materials extracted from deducting processes are transported with the screw conveyors. They are used to transport materials from cement bag filter outlet and cyclone to cement bucket elevator.

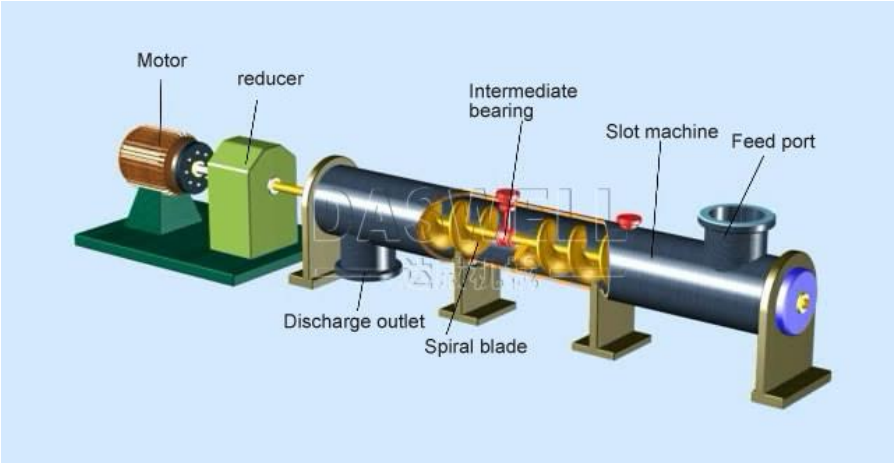

Figure 31: Screw Conveyor

3.5 Cement Production Process

Cement production process is operating clinker and additive raw materials like gypsum and pumice to produces Portland cement. These three materials are proportionally feed into cement mill by means of belt conveyers. They are then ground together in a cement mill. However, ordinary Portland cement which is made of 95% clinker and 5% gypsum is produced without the pumice as an additive. The cement ball mill grinds the clinker into fine powder - cement.

The output of a cement mill is charged into largest separator cyclone, then into smaller cyclones by air conveyors and the coarse materials are retained in the cement mill. The fine cement product is transferred to silo by means of bucket elevator for packing. The dust laden air is drawn through the cyclones by suction. The bag house is used to remove dusty particles from discharges of different equipment such as cement mills. In a bag house system discharged gas containing dusty particles is passed through a series of bags made of strong fabrics and return into cement silos for storage by means of screw conveyers and air slides.

Major types of cement are as follows:

- OPC – Ordinary Portland Cement
- PPC – Portland Pozzolana Cement
- PSC – Portland Slag Cement

- SRC – Sulphate Resisting Cement
- HAC – High Alumina Cement
- OWC – Oil Well Cement
- WC – White Cement

3.6 Cement Packaging

All the cement products are stored in the cement silos by means of bucket chain elevators. In the cement plant, there are cement silos, each with around 10,000 tons capacity. Cement silos use air compressors and root blowers for blending and aeration. Cement is discharged to packaging machinery by means of pneumatic conveyors.

Figure 32: Cement Silos

The cement discharged from silo is also transported by means of air slides and bucket elevators via screens which are at the receiving hopper of the packing machines. The cement is packed by rotary packers and finally dispatched to the market.

Cement can also be discharged from the silos directly into bulk carrier trailers or trucks. The cement silos should have a blower extraction system to reduce power consumption. There are two types of packing machines namely: stationary and rotary packers.
The principal elements of the packing line include the following:

- Vibrating screen
- Feed hopper
- Rotary feeders
- Discharging belt

3.6.1 Flow of Material in the Packaging Plant

The cement products are moved by means of chain bucket elevators via the vibratory screens into the rotary vane feeders which direct the products into the packer machines. Vibratory screens used here are equipped with control systems with sensors inside the hopper. The rotary vane feeder is equipped with alternating gears to regulate the discharge of the product into the packer machine.

During packing, dust from packer machines is collected by means of collecting sucking chute and separators then returned back to silos through the screw conveyors.

3.6.2 Rotor Packer Machine

There are rotor packing machines designed for packing loose, bulk material at the capacity range of up to 120tons/hr and cement filling system with root air blowers for free flow bagging.

Figure 33: Rotor Packer Machine

Basically, the rotor packers use different types of sensors including the following:

- Position sensors
- Proximity sensors
- Level sensors

- Weight sensors are found to be work together to put out the final products.

4.0 Conclusion

Generally, the cement manufacturing industry is one of the most important manufacturing industries in Kingdom of Saudi Arabia with an annual production more than 70 million tonnes a year. It makes Kingdom of Saudi Arabia the highest cement producer in the GCC. Accordingly, the cement manufacturing industry is available to meet demand for cement throughout Saudi Arabia.

The growing demand for the cement in Saudi Arabia is closely linked to the developments of the construction activities in Saudi Arabia, including the construction of public buildings, homes, roads, industrial plants, reactors, bridges, piling structures and others.

In the valuation of machinery and equipment of the cement manufacturing industry, the first step that a machinery and equipment valuer should take is to understand the process of manufacturing cement from the beginning of process up to end, i.e. from the source (quarry) to final the product (cement).

The valuer should also identify the machines in each section found in the cement manufacturing plant. A detailed list of machinery and equipment can also be obtained from the cement plant owners and an inspection of each machine can be carried out at the cement plant.

As a guide to machinery and equipment valuer in valuation of the cement manufacturing industry, one can refer to the notes provided above including a sample of valuation report for cement manufacturing plant provided in the **Appendix A.**

REFERENCES

Dr. Asif Baig, 2015, Saudi Cement Industry – A fundamental Analysis, International Journal of Science Commerce and Humanities.

Albara's Alwazir, 2019, U.S. Saudi Arabian Business Council.

Gasim Abdulkarim, Jadwa Investment, 2008, The Cement Industry in Saudi Arabia.

Tizita Moges, Selamu Abule & Dereje Endalamaw, Cement Manufacturing Process, extracted from https://www.cementequipment.org/home/cement-manufacturing-process/

Cementindusneed, Cement Plant Optimization extracted from https://cementindusneed.com/cement-manufacturing/

Great-Wall Machinery Corporation, Plant and Machinery Products, extracted from http://www.great-wall.co

Albara'a Alwazir, U.S. Saudi Arabian Business Council, 2019, USSABC Economic Brief: Saudi Arabian Cement Sector Looks to Rebound.

Santhosh Balakrishnan, Riyadh Capital, 2018. KSA Cement Sector Handbook, 2018 Outlook: On a Modest Recovery Path.

Mefic Capital, 2018, Cement Sector Quarterly Review, Quarterly Review of Cement in Saudi Arabia.

Yamama Cement Annual Report, 2019

Yanbu Cement Annual Report, 2019

ME 405

Advanced Level 2: Applied Machinery and Equipment Valuation – Integrated Project

VALUATION OF DAIRY PROCESSING PLANT

TABLE OF CONTENTS **PAGE**

1.0 Valuation of Dairy Product Processing Plant

1.1 Introduction

Dairy product is one of the most important products to households around the globe. In most developing countries, milk is produced by smallholders and milk production contributes significantly to household livelihoods, food security and nutrition.

In recent decades, developing countries have increased their share in global dairy production. This growth is mostly the result of an increase in numbers of milk producing animals rather than a rise in productivity per head. In many developing countries, dairy production is constrained by poor-quality feed resources, diseases, limited access to market and services and dairy animals' low genetic potential for milk production. Unlike developed countries, many developing countries have hot and/or humid climates that are unfavourable for milk production.

Some countries in the developing world have a long tradition of milk production, and milk or its products have an important role in the family diet. Other countries have recently established significant dairy production. Most of the former countries are located in the Mediterranean and Near East, the Indian subcontinent, the savannah regions of West Africa, the highlands of East Africa and parts of South and Central America. Countries without a long history of dairy production are in Southeast Asia (including China) and tropical regions with high ambient temperatures and/or humidity.

The volume of cow milk produced worldwide has risen steadily over the last several years. In 2015, 497 million metric tons of cow milk was produced worldwide and by 2019 that had risen to 522 million metric tons. India is the world's largest milk producer with 22% of global production, followed by the United States of America, China, Pakistan and Brazil. The world's region with the highest cow milk production is the European Union, which generated nearly 155 million metric tons of cow milk in 2019. The countries with the highest milk surpluses are New Zealand, the United States of America, Germany, France, Australia and Ireland. The countries with the highest deficits are China, Italy, Russian, Mexico, Algeria and Indonesia.

Cow milk is not often consumed in liquid form but in other forms like cheese, butter or yogurt. The European Union and the United States are the two top producers of cheese in the world. Additionally, India was by far the top producer of butter. The European Union came in the second with about half production.

2.0 Dairy Product Manufacturing in Saudi Arabia

Saudi Arabia is the largest dairy market in the GCC region with the production of milks and milk products was estimated at about 2.74 million metric tons per year.

According to the General Authority for Statistics, Saudi Arabia that the capacity of specialized cow farms reached at 364,389 cows in 2017. The results also showed that cow milk production reached 2,074,562,485 litres in the specialized cow farms. The average cow milk production in Saudi Arabia produces 10,133 litres of milk per year. However, about 31,883 calves were reared in specialised cow farms in 2017. Packaging improvements, social media presence and aggressive advertising through various channels are some of the factors that drive the growth of this market.

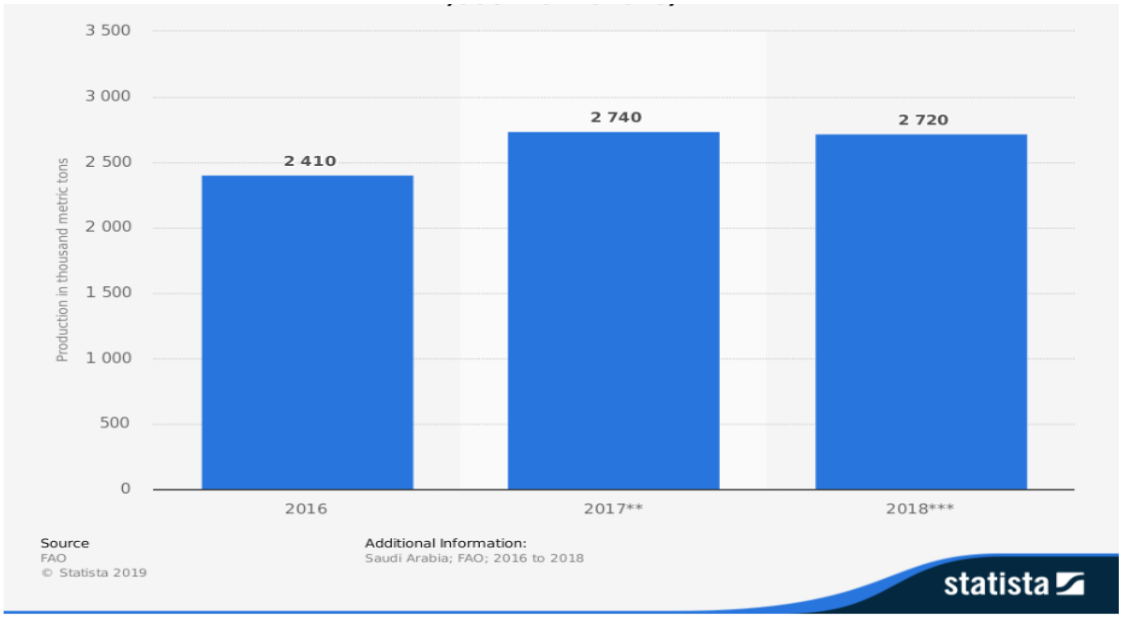

Figure 1: Production of Milk and Milk Products in Saudi Arabia (in 1,000 metric tons)

The dairy industry in Saudi Arabia started with small scattered farms and over time transformed into large commercial dairy farms. Consumption of milk and related products is the second highest after cereals, reinforced by consistent growth over the years. Milk products are an important part of the people's diet in Saudi Arabia and have a place in the daily consumption of food.

In response to the oil shocks of the 1970's, the Saudi Arabia government pushed for self-sufficiency, which laid the foundation for the modern dairy sector in the region. Health awareness is one factor that is increasingly playing a bigger role in driving the market for dairy products. People are concerned about cutting down their consumption of fatty and high-calorie foods, thereby shifting to health

dairy products. New dairy product development has slowed down and instead, companies are focusing on packaging improvements and extensive campaigning.

Although Saudi Arabia is one of the world's most arid environments, the success of the dairy industry in the region can be attributed to the application of technology. At typical desert temperatures (as high as 50 degrees Celsius), milk production would usually plunge, the yield would get spoilt quickly, and affected by dangerous bacteria. However, this problem was overcame by using technology that can help sustain ambient temperatures and computers to monitor the humidity and temperatures in the setup. Saudi Arabia is one of the regions where milk production has been automated.

In Saudi Arabia there are several companies that manufacture milk products for local supply as well as export to neighbouring GCC countries. Some of the major companies manufacturing dairy products in Saudi Arabia are as follows:

VOL	COMPANY NAME	PRODUCT NAME	DAIRY PRODUCT
1	Almarai Company	Almarai	Fresh Laban, Vetal Laban, Fresh Milik, Fresh Flavour Milk, Long Life Milk, Evaporated Milk, Lactofree, Full Cream Milk Powder, Yoghurt, Cheese, Butter and Ghee.
2	The National Agricultural Development Company	Nadec	Laban, Fresh Milk, Long Life Milik, Yoghurt, Labnah, Cream, Cheese and Ayran
3	Al Safi Danone Limited	Al Safi	Laban, Fresh Milk, Long Life Milk, Yoghurt, Labneh and Cream
4	Saudia Dairy & Foodstuff Company (SADAFCO)	Saudia	Laban, Fresh Milk, Long Life Milik, Yoghurt, Ice Cream, Butter, Cheese, Instant Milk Powder and Evaporated Milk
5	Najran Dairy Company Limited	Najran	Long Life Milk
6	Halwani Bros	Al-Fallaha	Yoghurt, Labneh, Cream, Cheese

Almarai is a major dairy company in the region and was set up in 1977 as a partnership between two Irish brothers and Prince Sultan bin Mohammed bin Saud Al-Kabeer. Almarai is the largest vertically integrated dairy company worldwide. Almarai is the largest food manufacturer and distributor in the Middle East, with unique regional coverage and market capitalization of more than SAR 12.5 billion. Since 1999 Almarai has diversified into juices, bakery, poultry, and infant nutrition. Between 1996 and 2006, gross sales doubled to SAR 500 million. Since listing in 2005, sales have grown by 543 percent and net income by 396 percent, soaring to more than SAR 3.7 billion since then. Today, total assets exceed SAR 7.3 billion, with more than SAR 4.2 billion invested in capital expenditure over the last five years.

Almarai's farms occupy ten thousands of hectares and produce hundred thousands of tons of alfalfa and soybean every year. This feedstock is shipped to Saudi Arabia and the company's dairy and poultry farms. The cattle yards provide shaded housing, air cooling, and showers for Almarai's herd of 170,000 Holstein cows. A team of 160 veterinary professionals tend to the entire herd, including the 200 calves born every day. Each cow produces more than 40 litres of milk daily, totalling around a billion litres annually. The company's plant for infant formula is one of the most advanced in the world, with nutrition experts working tirelessly to create market-leading products. The current scale of operations now exceeds the original 1976 founding concept, which sought to transform traditional dairy farming in Saudi Arabia to meet the needs of the burgeoning domestic market.

Towards the end of 2019, Almarai dominated the wider GCC Dairy market with 55.0% market share. The challenge of a milk surplus across the industry prompted some players to offer discounts, while rising labour costs and animal feed import expenses put pressure on the milk industry. An underlying commitment to quality saw Almarai recovered well from the impact of a fresh dairy price increase in 2018, gaining the biggest market share. Almarai was successful in growing market share in the UAE and other GCC countries. Margins for dairy foods remained healthy, driving improved performance for the category. Strategic sourcing and careful ingredient pricing management remain important for safeguarding profitability.

3.0 Dairy Products Manufacturing Process

The dairy products manufacturing process involves several stages and depends on the type of dairy products being manufactured. The type of dairy products produced from milk such as fresh milk, fresh laban, vetal laban, fresh flavour milk, long life milk, evaporated milk, lactofree, full cream milk powder, instant milk powder, yoghurt, cheese, ice cream. butter and ghee. For the purpose of this module, only one dairy product will be discussed in detail that is the fresh milk production.

Below is the process to produce fresh milk in the dairy product manufacturing plant as follows:

i) Milik collection and reception at the processing facility
ii) Raw milk processing
iii) Milk product processing
iv) Milik product packaging and distribution

The overall process flowchart for milk processing is shown in **Figure 2** below.

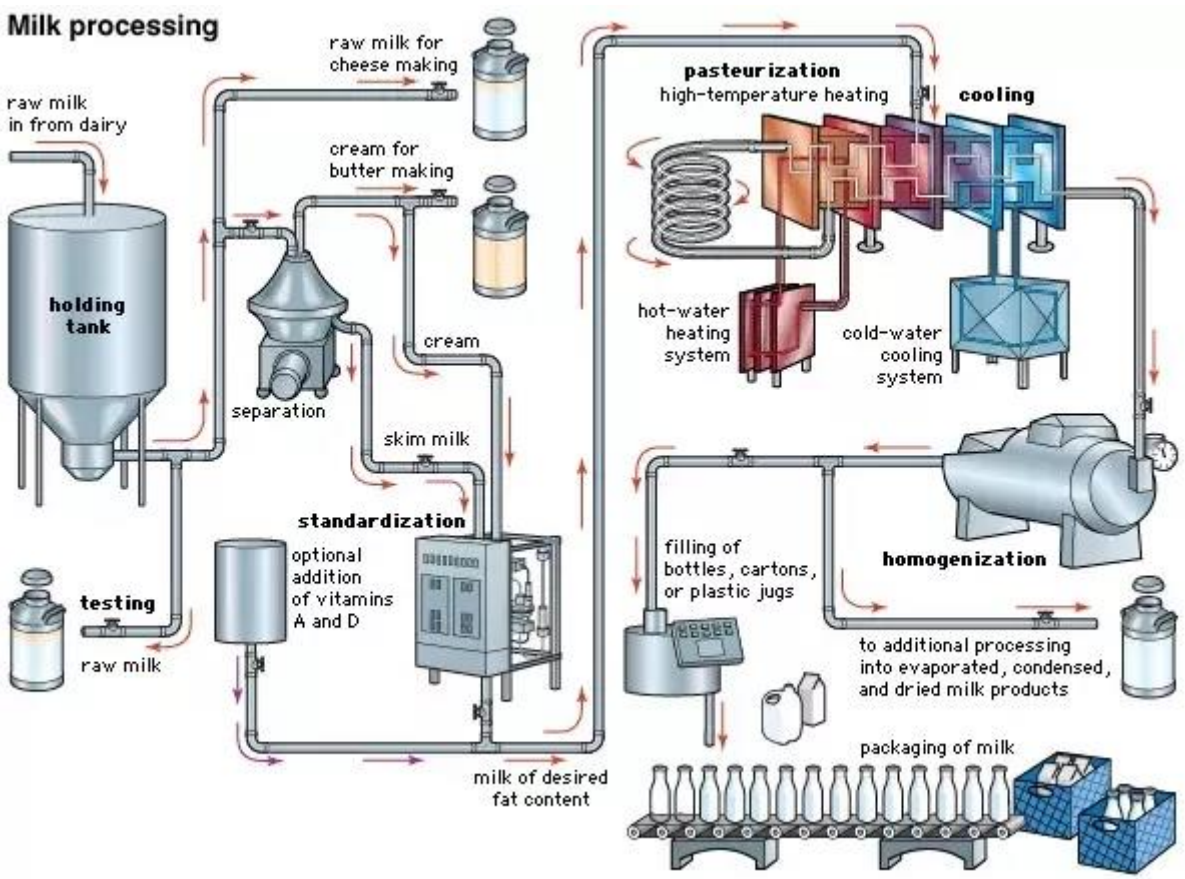

Figure 2: Milk Processing Flow

3.1 Milk Collection and Reception at Processing Facility

Milk is produced constantly at the farmers´ facilities where the cows are milked. The milk is then transported on tank trucks and delivered to different dairy and milk plants. Milk is then pumped from the milk tanks into the milk reception units, where the milk is deaerated and tested and then pumped over again to the storage units or the processing line. In the milk reception units, milk is measured

and tested, air is eliminated, and the milk is cooled before further processing or storage.

3.1.1 Delivery to The Dairy Factory

The raw milk arrives at the dairy factory in insulated road tankers. The milk will always be kept well chilled, free from air and treated as gently as possible. For example, tanks are well filled to prevent the milk from sloshing around inside the container.

Figure 3: Milk Tanker Truck

When milk is collected by the tanker trucks and trailers and delivered to the dairy plant milk room. The loading hose from the tanker is connected to the inlet valve on the plant cooling tank as shown in **Figure 4**. The tanker is usually fitted with a flow meter and pump so that the volume is automatically recorded. Otherwise, the volume is measured by recording the level gauge of the tank in question. In many cases, the milk tanker is equipped with an air-eliminator. Pumping is stopped as soon as the cooling tank has been emptied. This prevents aeration of the milk. The tank of the bulk collection vehicle is divided into several compartments to prevent the milk from sloshing around during transportation. Each compartment is filled in turn and when the tanker has completed its scheduled round, it delivers the milk to the dairy plant.

Machinery and equipment which is valued in this section include are milk tanker trucks, milk cooling tanks, milk reception equipment such as pumps, valves, gauges, pipework, connections and cooling systems available on the tanks.

Figure 4: Milk Cooling Tanks (Silo Tanks)

3.1.2 Raw Milk Testing

In the case of bulk collection, the driver takes a sample of the milk at the farm for testing at the dairy. Milk that deviates in taste and smell from normal milk receives a lower quality rating. Milk with significant deviations in taste and smell should be rejected by the dairy.

Milk from sick animals and milk which contains antibiotics or sediment must not be accepted by the dairy. Even traces of antibiotics in milk can render it unsuitable for the manufacture of products which are acidified by the addition of bacteria cultures such as yoghurt and cheese. Normally, only a general assessment of the milk quality is made at the farm. The composition and hygienic quality are usually determined in a number of tests on arrival at the dairy.

While most dairy processing plants have their own lists of tests to be routinely performed on the raw milk received by them, there are tests that should be done to ensure a safe and high-quality milk supply. A suggested listing of these tests follows, and this has been arbitrarily divided into tests to be performed ‘prior to unloading’ the milk and ‘after unloading’ the milk.

The most common tests carried out on milk supplies are listed in **Table 1** and **Table 2** below:

Table 1: Tests to be run on all raw milk prior to unloading from the tanker

VOL	TEST
1	Direct Microscopic Count (DMC)
2	Presence of Inhibitory Substance (Antibiotic)
3	Temperature
4	Freezing Point (Cryoscope)
5	Sensory evaluation
6	Sediment Test
7	Preliminary Incubation Count (PIC)

Table 2: Tests to be run on all raw milk after unloading at the processing plant

VOL	TEST
1	Standard Plate Count (SPC)
2	Direct Microscopic Somatic Cell Count (DMSCC)
3	Acid Degree Value (ADV)
4	Laboratory Pasteurization Count (LPC)- Troubleshooting only
5	Fat and Total solids
6	Coliform
7	Presence of aflatoxins
8	HR-3 (Test for gram-positive bacteria)
9	Titratable acidity

Most of the equipment used for raw milk testing is laboratory equipment. Here are some examples of equipment used for raw milk testing as shown in the **Figure 5** to **Figure 8** below.

Figure 5: Cryoscope - Testing for Added Water in Milk

Figure 6: Lacticheck – Raw Milk Testing Compact, Precise and Exceptionally

Figure 7: SpectroQuick – Fat Composition Analysis

Figure 8: BacSomatic – Tests for Bacteria and Somatic Cell Count

3.2 Raw Milk Processing

In the dairy plant, milk is processed into different products by means of process machinery and equipment. Production usually takes place continuously in a closed process, where the main components are connected by a system of pipes. Raw milk processing involves the following operations:

i) Deaerator
ii) Separation
iii) Standardization – Blending
iv) Pasteurization
v) Homogenization
vi) Packaging

3.2.1 Deaerator

A deaerator is an equipment used to removes oxygen and other dissolved gasses from the raw milk. Air in milk, whether it is free air derived from transportation/agitation or mechanical air derived from damaged seals/gaskets or incorrect process design can cause cavitation during homogenization. Both sources can be eliminated with the deaerator.

oxygen content may be derived from several sources. the complete removal of oxygen from the process water does not guarantee an oxygen-free end-product, it can be “added in” again during other production step. However, the amount of water can significantly affect final product quality. As such, reducing oxygen content in process water to the lowest possible value is very important in milk production.

Deaerator can remove free air to a certain extent, dissolved oxygen out of a final product. The unit’s exact ability to remove dissolved oxygen will depend on the desired product and the amount of air/oxygen present prior to deaeration.

Figure 9: Deaerator Unit

3.2.2 Separation

Separation equipment is very important to the clarification process and product quality. Clarification is defined as the separation of two liquids having different gravities. The separation process involves the collection of present solids and the de-watering of suspensions or biomasses. The process of separation is often carried out to separate valuable liquids or solids from a solution.

Milk skimming is the separation of raw milk into skim milk and cream, both warm and cold milk skimming achieve this level of separation with a different process. Skimming is a process that takes place after the clarification of the raw milk. The clarification of milk is often upon delivery to the dairy to remove dirt and somatic cell particles. The milk clarifier can operate with cold or warm milk. However, clarification efficiency improves at higher temperatures.

Figure 10: Clarification Machine for Separation

Warm milk skimming during pasteurization is the most common centrifugal separator application in dairies. The product temperature is normally kept between 45ºC and 55ºC in order to ensure optima skimming efficiency. Skimming efficiency is influenced by a range of factors like the transport of the whole milk, milk storage temperature and time, seasonal variation, milk quality, mechanical treatment and free air-content upstream from the separator. Skimming efficiency is expressed as a percentage of residual fat content in the skimmed milk.

Cold milk separation at 4ºC takes place in several processes including cheesemaking and high-quality cream production. Cold milk separation enables significant savings in energy and thermal equipment such as heat exchangers. However, cold milk skimming efficiency is lower than that of warm milk skimming and cream concentration does not exceed 40-42%. Skimming efficiency is improved by increasing temperature and/or reducing flow-rate. Viscosity and other cream characteristics at low temperatures require the use of a special hermetic separator to achieve optimal skimming results.

In a centrifugal separator, the disk stack is equipped with vertically aligned distribution holes. **Figure 11** shows schematically how fat globules are separated from the milk in the disk stack of a centrifugal separator.

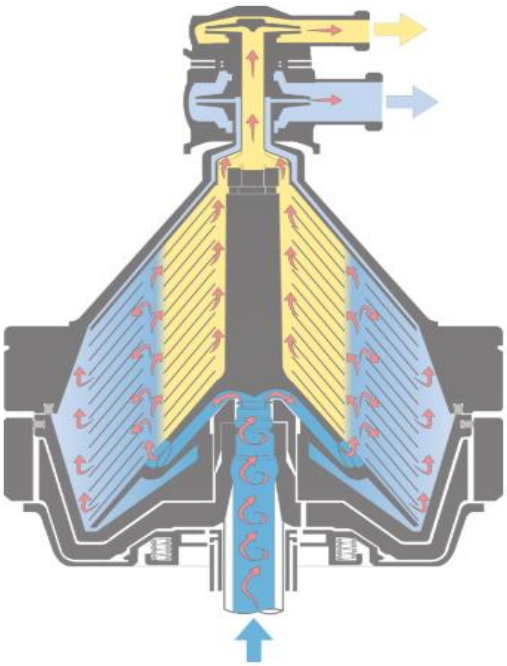

Figure 11: Centrifugal Separator Bowl – The milk enters the disk stack through the distribution holes.

The milk is introduced through vertically aligned distribution holes in the discs at a certain distance from the edge of the disc stack. Under the influence of centrifugal force, the sediment and fat globules in the milk will settle radially outwards or inwards in the separation channels, according to their density relative to that of the continuous medium (skim milk).

In the clarifier, the high-density solid impurities in the milk will settle outwards towards the periphery of the separator and collect in the sediment space. Sedimentation of solids is assisted by the fact that the skim milk in the channels in this case moves outwards the axis of rotation. The cream continues to an axial outlet.

The skim milk moves outwards to the space outside the disc stack and form there through a channel between the top of the disc stack and the conical hood of the separator bowl to a concentric skim milk outlet. The amount of fat that can be separated from milk depends on the design of the separator, the rate at which the milk flows through it, and the size distribution of the fat globules. The whole milk supplied to the separator is discharged as two flows, skim milk and cream, of which the cream represents about 10% of the total throughput. The proportion discharged as cream determines the fat content of the cream.

The solid ejection that collects in the sediment space of the separator bowl consist of straw and hairs, udder cells, white blood corpuscles (leucocytes), red blood corpuscles, bacteria, etc. The total amount of sediment in milk varies to about 1 kg/10,000 litres. The sediment space volume varies depending on the size of the separator typically 10-20 litres.

3.2.3 Standardization – Blending

Standardization is defined as the adjustment of milk or cream fat content to a specified or desired value. The purpose of standardization is to give the milk a defined, guaranteed fat content. In general, the fat content of raw milk is higher than the fat content of the various dairy products to be manufactured. The standardized fat content of these products usually ranges between a minimum of 0.5% and a maximum of 3.5%., but fat contents as low as 0.1% and 0.5% also occur. The fat contents are a very important economic factor. Consequently, the standardization of milk and cream is carried out with great accuracy.

Besides the continuous control of the standardized milk fat content the equipment for the standardization units can also provide a continuous control of the cream fat content and a proportional dosing of additives such as vitamin A and vitamin D. The equipment for the standardization can process both warm and cold milk.

Figure 12: Standardization Unit for Cream or Milk Fat

The equipment shown in **Figure 12** above is used for standardization of cream or milk fat content and provide a continuous control of the proportional dosing of additives. The cream fat content is determined by the density measurement in the mass flow meter. The cream fat control is affected by variation of the cream flow. Control procedures adapted to the different operating conditions (start up, production, bowl discharge, shut down) consider the specific requirements of the separator.

On standardizing, a part of the cream flow is controlled via a mass-flow meter and dosed back into the skim milk. The control components for the skim milk backpressure are integrated on the standardization equipment unit. For all milk application the feed flow to the separator is fully controlled and monitored.

3.2.4 Pasteurization

Pasteurization of milk is a microbiocidal heat treatment intended to:

- Reduce the number of harmful microorganisms to a level at which they do not constitute a significant health hazard.
- Reduce the level of undesirable enzyme and spoilage bacteria and thus increase the keeping quality.
- Achieve the preceding two goals without destroying the original characteristics of the product.

Milk pasteurization refers to the process of heating every particle of milk to a specific temperature, holding it at the same temperature for specific duration

and followed by rapid chilling to less than 7ºC. Accordingly, there can be numerous combinations of time and temperatures for heat treatment to get the desirable microbial or chemical effects like improvement in keeping quality, destruction of pathogens or destruction of all microorganisms.

Higher temperature with longer holding time may give drastic reduction in the number of microorganisms but it also damages the nutritional constituents in milk. It becomes necessary to select a combination of time-temperature, which would cause maximum microbial destruction with minimal nutritional loss. Thermization is a treatment, in which milk is heated at 63ºC for 15 seconds. It is milder than pasteurization and usually adopted to improve keeping quality rather than to eliminate pathogens. Whereas, sterilization involves heating milk to above 100ºC, and it is much more severe than pasteurization and it kills all the living cells in milk.

Pasteurization is considered as an optimized heat treatment as it kills all the pathogenic microorganisms and renders the milk safe for human consumption with minimum nutritional loss.

Figure 13 shows a typical process flow in a milk pasteurization unit. The milk enters the unit through the balance tank (1) and pumped through plate heat exchanger (16), where it is pre-heated before it continues to the separator (5), which produces skim milk and cream.

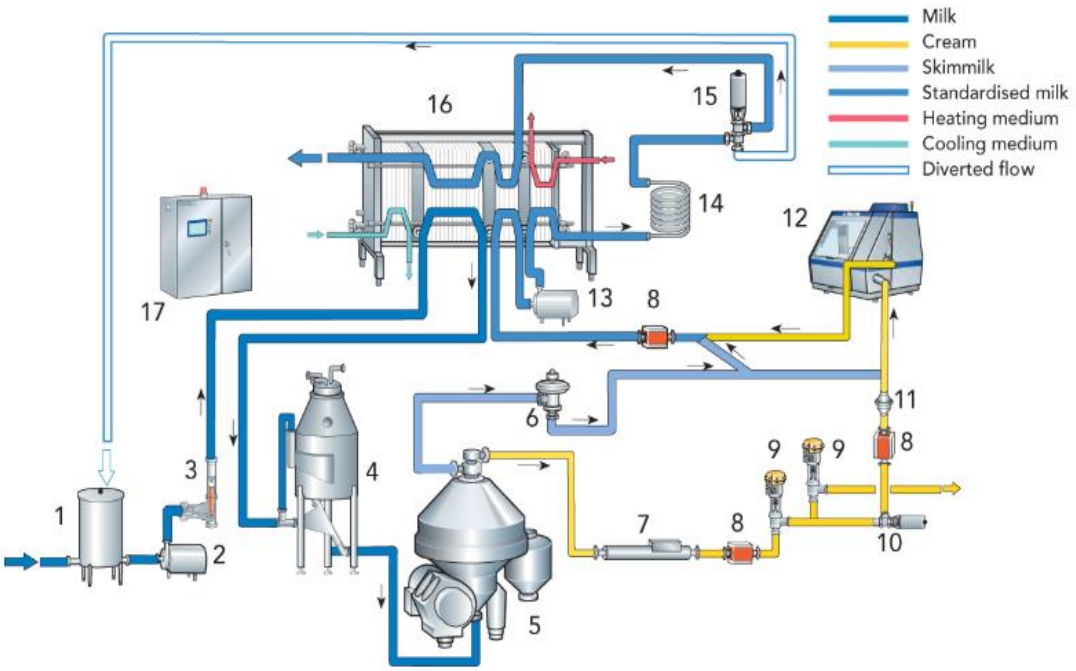

Figure 13: Pasteurization Unit for Market Milk with Partial Homogenization

1	**Balance Tank**	**10**	**Shut-off Valve**
2	**Product Feed Pump**	**11**	**Check Valve**
3	**Flow controller**	**12**	**Homogenizer**
4	**Deaerator**	**13**	**Booster Pump**
5	**Separator**	**14**	**Holding Tube**
6	**Constant pressure valve**	**15**	**Flow Diversion Valve**
7	**Density transmitter**	**16**	**Plate Heat Exchanger**
8	**Flow transmitter**	**17**	**Process Control**
9	**Regulating valve**		

There are four different methods of pasteurization are as follows:

3.1 Low Temperature Long Time (LTLT) pasteurization

3.2 Continuous pasteurization

3.3 Flash pasteurization

3.4 Ultra High Temperature (UHT) pasteurization

The pasteurization process is identified by its specific temperature and time combination. Designing of pasteurization process refers to the fixing of time temperature combination of certain process. International Dairy Federation (1980) defines pasteurization as “a process applied to a product with the object of minimizing possible health hazards arising from pathogenic micro-organisms associated with milk by heat treatment which is consistent with minimal chemical, physical and organoleptic changes in the product”.

Temperature and time combination selected should be high enough to destroy all pathogenic microorganisms in milk. At the same time, it should be low enough to cause minimum possible damage to the heat sensitive milk constituents. Hence, this process is designed to achieve an intelligent compromise to maximize microbial destruction and minimize the chemical changes in milk. It is necessary to identify the relationship between temperature and the rate of destruction.

Though pasteurization equipment for batch and continuous units of pasteurization are different in construction and operation, the function is same. The milk pasteurization equipment has undergone rapid changes in the last century. Some of the distinguishable designs include coil vats, glass lined tanks, spray vats, heater, drum or film heater, internal tubular heater and external tubular (surface) heater. Both batch pasteurizer and continuous pasteurizer are described in detail as follows:

i) Batch Pasteurizer

The batch pasteurizer is a jacketed kettle with an agitator. The jacket is used for circulation of the heating medium during heating and holding period. After holding period is over, chilling medium is circulated around the same jacket. In its simplest form, a batch pasteurizer consists of the following components as shown in **Figure 14.**

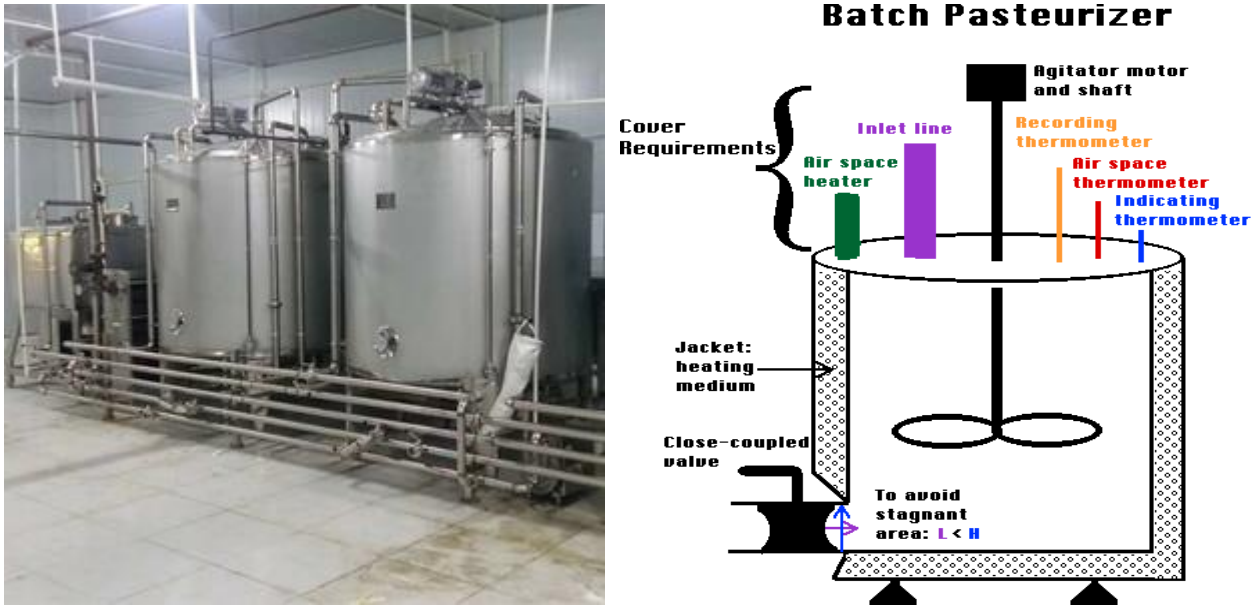

Figure 14: Batch Pasteurizer Unit

ii) Continuous Pasteurization

Continuous High Temperature Short Time (HTST) pasteurization unit consists of plate heat Exchanger (PHE), holding tube, flow diversion valve, booster pump, heating mechanism, chilling mechanism and back pressure valve. However, a typical commercial HTST pasteurizer has additional components for operational convenience, better quality of milk and energy efficiency. **Figure 15** shows a typical HTST pasteurization unit.

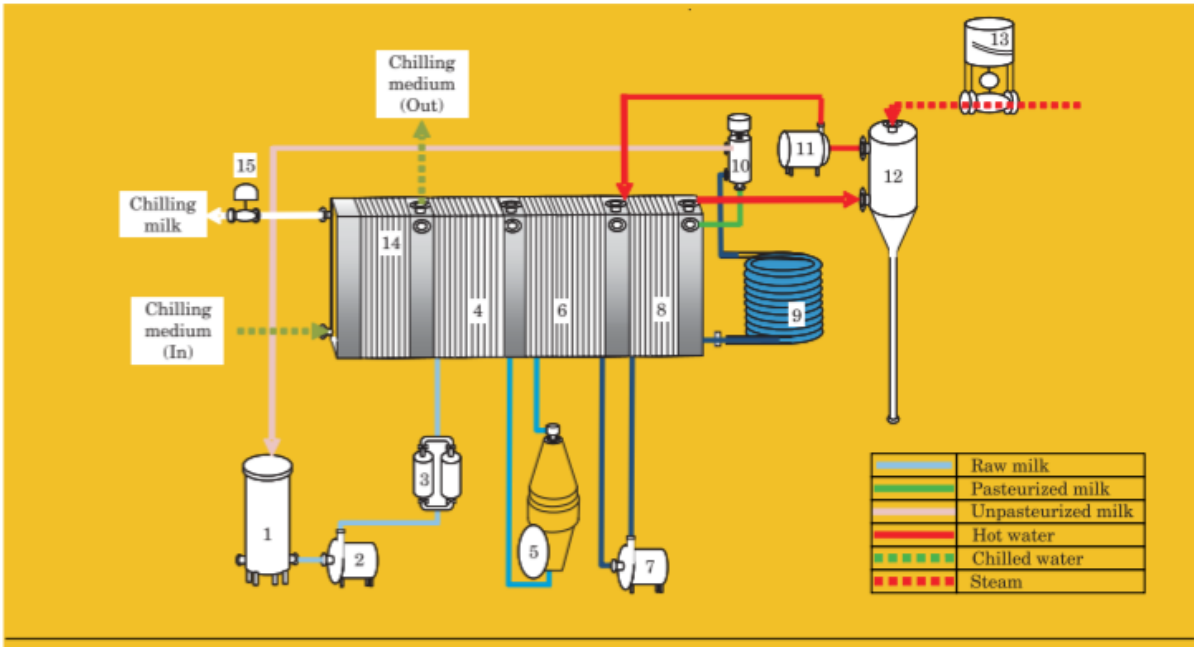

1. Balance tank; 2. Feed pump; 3. Duplex milk filter; 4. Regeneration section-I; 5. Cream separator; 6. Regeneration section-II; 7. Booster pump; 8. Heating section; 9. Holding tube; 10. FDV; 11. Hot water circulation pump; 12. Steam battery; 13. Steam valve; 14. Chilling section; 15. Back pressure valve

Figure 15: Typical HTST Pasteurizer Unit

The raw milk from the main tank passes through float-controlled balance tank (1) by means of feed pump (2) into duplex milk filter (3) in order to remove unwanted materials. Filtered milk then passes through the regeneration section-I (4) of PHE, where it is heated to about 50°C. The heated milk is fed into cream separator (5) if desired, or passes through regeneration section-II (6) where it is heated to about 65°C. The milk then pumped by booster pump (7), to heating section (8). For homogenization is required, the milk passes through regeneration section-II (6) and then goes into the. In the heating section of PHE, the milk is heated to specified pasteurization temperature by hot water.

From heating section passes through holding tube (9), and then to the flow diversion valve (10) which returns the unpasteurized milk back to balance tank (1).

Properly pasteurized milk is directed to downstream sides of regeneration section-II and regeneration section-I. It acts as heating medium for incoming raw milk. The pasteurized milk gets cooled to about 10 to 15°C depending upon the initial temperature of raw milk. From regeneration section-I, the pasteurized milk enters into chilling section (14), where it is cooled below 5°C by chilling medium

and goes to storage tank. Hot water is circulated in the system through a compatible centrifugal pump (11) to maintain its temperature through steam injection in a specially designed unit called steam battery (12).

Similarly, the chilled water is recirculated by centrifugal pump from ice bank tank or ice silo. The following are descriptions of all components of the pasteurizing system:

A. Balance Tank

It is a small tank that is placed between the milk silo and pump supplying milk to pasteurizer; it acts as a flow stabilizing agent and ensures constant supply of milk. It also nullifies the effect of milk head in the silo. The milk level in the balance tank is controlled between two limits by a float.

B. Feed Pump

The feed pump is a normal centrifugal pump having sanitary design. The pump is installed that negligible suction head will be exerted. It obviates the use of suction valve as the valve is undesirable from the viewpoint of sanitary design.

Figure 16: Feed Pump

C. Plate Heat Exchanger (PHE)

The PHE is the most important component of HTST pasteurizer. In its simplest form, as shown in **Figure 17,** a PHE consists of a front base also known as head terminal, a back base also known as end terminal, 4 bars known as guiding rails that connect the front and end terminals forming a frame like structure. Number of thin plates is fitted in the frame forming a horizontal stack, which may or may not fill the complete frame length. When the complete length of the frame is not filled with the plate stack, an additional

thick plate known as pressure plate is included as the last supporting plate and is tighten with a central screw to provide the required contact pressure.

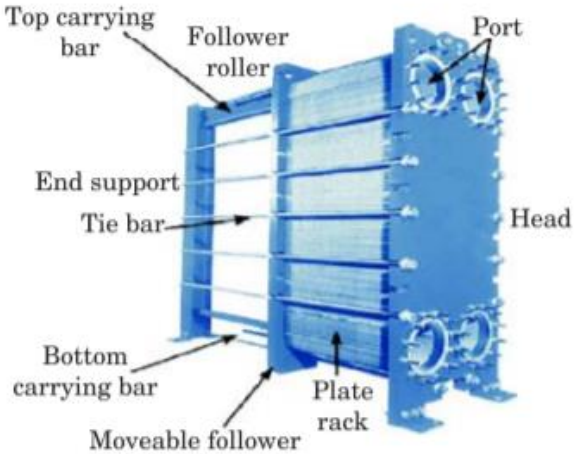

Figure 17: Plate Heat Exchanger (PHE)

D. Holding Tube

The milk heated to pasteurization temperature is held at the same temperature for specific duration of time to affirm proper pasteurization. This is done in the holding section or tube, the latter being more common. Ideally the milk is heated to minimum 71.7ºC and held for 15 seconds and maintained as the actual temperature and the minimum residence time of milk in the holding section. This is because drop in temperature of milk while flowing through the holding tube is inevitable. Holding tubes are made in such a way as to reduce the loss of heat. Ideally, flow plug is desirable in the holding tube to ensure uniform holding time.

E. Flow Diversion Valve (FDV)

FDV is an important component of HTST pasteurizer which identifies whether the milk is properly pasteurized or not. Mostly, FDV is a pneumatic three-way valve which operates by means of an ON/OFF process controller which diverts the milk flow to raw milk balance tank, if it is not properly pasteurized. As shown in **Figure 18**, the FDV consists of three-way diaphragm valve. There are two chambers through which air pressure and spring tension act on either side of the diaphragm. The imbalance between these two forces directs the valve position. Since the spring tension remains unaltered, it is mainly the air pressure that directs the valve position. When air pressure exceeds spring tension the valve stem is lifted upward and vice versa.

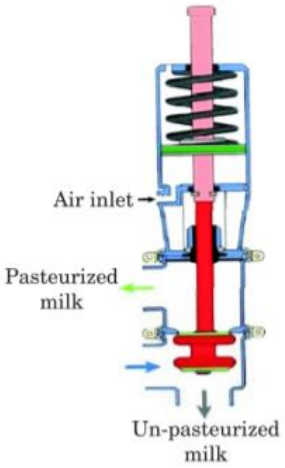

Figure 18: Flow Diversion Valve

The flow of air to the valve is controlled by a solenoid valve, which is activated through a process controller which is attached with a temperature sensor at the end of holding tube. The sensor measures the temperature of milk at specified time interval in milliseconds. The measured temperature (Process Value, PV) is compared with the set point (Pasteurization Temperature, Ps). If the measured temperature is more than the set pasteurization temperature, it is an indication that the milk in the holding tube had a temperature higher than the specified temperature, thus signify proper pasteurization.

The air pressure is always maintained in the FDV. The moment measured temperature is lower than the set pasteurization temperature, process controller deactivates the solenoid valve, the air pressure on the diaphragm is released and spring tension comes into action. The valve stem drops, and the flow is diverted. To set the flow back when the temperature has been achieved air supply is increased. The default position of the FDV is diverted or closed; it needs constant air pressure to remain. To keep the FDV in its default position closed or diverted, constant air pressure supply is maintained. This type of FDV is called as air-to-open FDV. Another type of FDV, which normally remains open and requires air pressure to get diverted or closed, is known as air-to-close FDV. In fact, these terminologies are used in context with any type of pneumatic valve.

F. Booster Pump

The booster pump is an ordinary centrifugal pump like feed pump. This pump boosts the milk pressure flowing downstream. During the continuous operation, there is possibility of pin holes developing in the pasteurizer plates on the channelled section. The occurrence of such holes will cause intermixing of the fluid on either sides of the plate and eventually lead to contamination of the pasteurized milk with raw milk, heating medium or chilling medium. It is not possible to frequently dismantle the plates or

continuously monitor the plates for pin holes developing and prevent the contamination by replacing such plates. Hence, a booster pump is installed in the pasteurized milk line as an anticipatory remedial measure. The booster pump increases the pressure of the pasteurized milk by approximately 0.5 bar so that in the incidence of pin hole leaking the pasteurized milk, being under higher pressure the milk will leak on the other side and its contamination would be prevented.

G. Back Pressure Valve

Though it is assumed that boosting pressure with pump creates positive differential pressure in the pasteurized milk line, the exact value cannot be affirmed. The pressure drop occurs on both the sides and due to deposits, it may be more on the raw milk side and may be lower on the pasteurized milk side if the contents of the pasteurized milk silo are at lower level. Hence, to ensure the creation and maintenance of certain minimum positive differential pressure on the downstream side of the booster pump, a pressure relief valve is installed at the outlet of the chilling section. The valve exerts prescribed back pressure required for its opening and is called back pressure valve (BPV).

H. Heating Medium Mechanism

In the heating section, milk is heated by hot water being circulated in a closed loop by means of hot water pump. The temperature of the hot water in the heating section is maintained at ~5ºC above the set pasteurization temperature. Drop in hot water temperature due to heat transferred to milk is controlled by steam injection using steam battery. The steam condensate continuously overflows the hot water circulation loop. Alternatively, in some units brazed PHE are used prevent overflowing condensate.

I. Chilling Medium Mechanism

The milk cooled in regeneration section is chilled to final storage temperature in separate chilling section using external chilling medium circulated in a closed loop. Usually pasteurized milk is chilled below 7ºC, to pack in pouches and below 4ºC, to transport in bulk container. The final chilled milk temperature is not set too close to initial freezing point of milk (about –0.55ºC) because freezing of milk in chilling section may clog and cause severe damage to the plates. Chilled water around 1–2ºC is the most preferred chilling medium. However, brine or glycol solutions are also used as next alternatives in some units. Generally, the flow rate of chilling medium is three times the milk throughput.

3.2.5 Homogenization

Homogenization has become a standard industrial process and a means of stabilizing the fat emulsion against gravity separation. Auguste Gaulin's patent in 1899 consisted of a 3-piston pump in which the product was forced through one or more hair like tubes under pressure.

Homogenization primarily causes disruption of fat globules into much smaller ones. Consequently, it reduces creaming and may also reduce the tendency of globules to clump or coalesce. Essentially, all homogenized milk is produced by mechanical means. Milk is forced through a small passage at high velocity. The disintegration of the original fat globules is achieved by a combination of contributing factors such as turbulence and cavitation.

The homogenization reduces fat globe size from an average of 3.5 micrometre in diameter to below 1 micrometre. This is accompanied by a four to six-fold increase in the fat/plasma interfacial surface area. The newly created fat globules are no longer completely covered with the original membrane material. Instead, they are surfaces with a mixture of proteins adsorbed from the plasma phase.

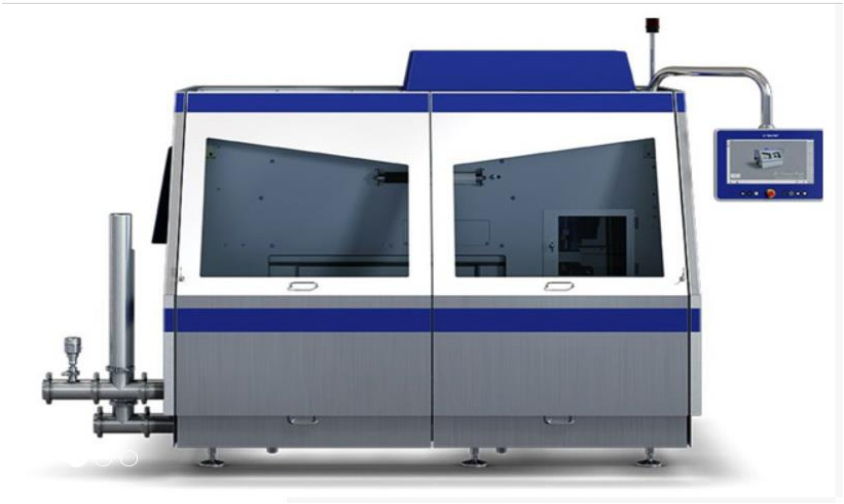

Figure 19: Homogenizer

Process Requirements:

The physical state and concentration of the fat phase at the time of homogenization contribute materially to the size and dispersion of the ensuing fat globules. Homogenization of cold milk, in which the fat is essentially solidified, is virtually ineffective. Processing at temperatures conducive to the partial solidification of milk fat results in incomplete dispersion of the fat phase. Products of high fat content are more difficult to homogenize and also more likely to show evidence of fat clumping, because the concentration of serum proteins is low in relation to the fat content.

Usually, cream with higher fat content than 20 % cannot be homogenized at high pressure, because clusters are formed as a result of lack of membrane material (casein). Increasing the homogenization temperature reduces the viscosity of milk and improves the transport of membrane material to the fat globules. Homogenization temperatures normally applied are between 55 – 80 °C, and homogenization pressure is between 10 and 25 MPa (100 – 250 bar), depending on the product.

Flow Characteristics

When the liquid passes through the narrow gap, the flow velocity increases **(Figure 20).** The speed will increase until the static pressure is so low that the liquid starts to boil. The maximum speed depends mainly on the inlet (homogenization) pressure. When the liquid leaves the gap, the speed decreases, and the pressure increases again. The liquid stops boiling, and the steam bubbles implode.

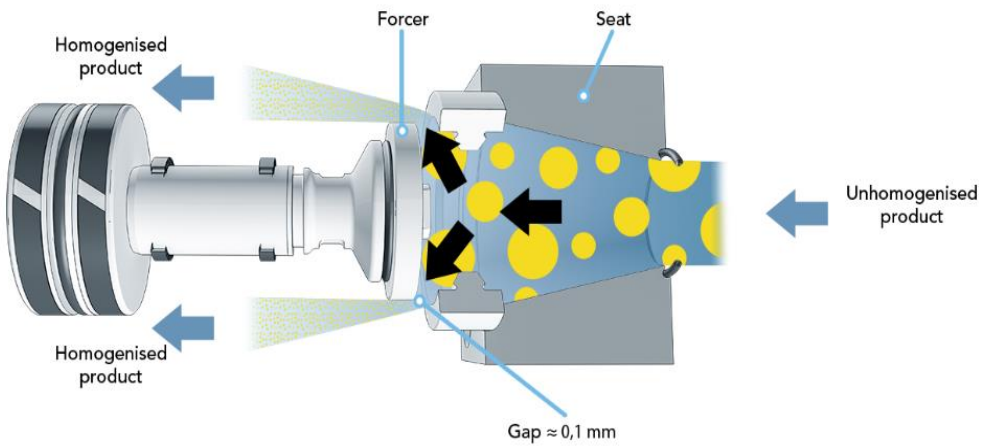

Figure 20: Homogenization – The milk is forced through a narrow gap where the fat globules are split.

The Homogenizer Machine

A high-pressure homogenizer is a pump with a homogenization device. A homogenizer is generally needed when high-efficiency homogenization is required. The product enters the pump block and is pressurized by the pump piston. The amount of pressure exerted is determined by the backpressure given by the distance between the forcer and seat in the homogenization device.

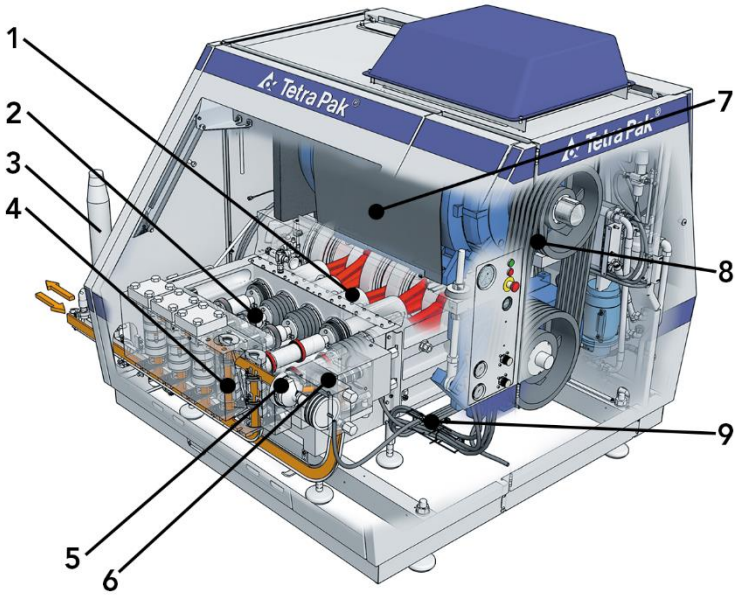

Figure 21: Typical Homogenizer Machine

1	**Crankcase**	**6**	**Homogenization device, second stage**
2	**Pistons**	**7**	**Main Drive Motor**
3	**Damper**	**8**	**V-Belt Transmission**
4	**Pump Block**	**9**	**Hydraulic Pressure Setting System**
5	**Homogenization device, first stage**		

In **figure 21**, the piston pump is driven by a powerful electric motor (1) via belts (2) and pulleys through a gearbox (3) to the crankshaft (10) and connecting rod transmission, which converts the rotary motion of the motor to the reciprocating motion of the pump pistons (9).

A piston pump is a positive pump and its capacity can only be adjusted by changing the speed of the motor or changing the size of the pulleys. To handle higher pressures, pistons with smaller diameters are installed. This will reduce the maximum capacity, because each machine size has a maximum crankshaft speed. A larger machine has a longer stroke length and/or more pistons. In many cases these pistons also have a larger diameter.

A high-pressure pump has normally three to five pistons (9), running in cylinders in a high-pressure block (8). They are made of highly resistant materials. The machine is fitted with double piston seals. Water is supplied to the space between the seals to lubricate the pistons. A mixture of hot

condensate and steam is also supplied to prevent reinfection when the homogenizer is placed downstream in aseptic processes.

A piston pump will always generate a pulsating flow. The acceleration and deceleration of the liquid will create a pulsating pressure in the suction pipe. To avoid cavitation in the pump, there is always a damper on the suction pipe to reduce the pulsation. On the outlet side, the pulsation might create vibrations and noise. That is the reason why the outlet pipe is also equipped with a damper.

A piston pump should not operate in a series of other positive pumps, unless there is a bypass – otherwise there could be extreme pressure variations and damage equipment. If the flow can be stopped downstream of a high-pressure pump, a safety device must be installed that opens before the pipe bursts.

When inspecting homogenizer machine for valuation purpose, the valuer must collect all the necessary information for a reliable valuation reporting. The main important information that valuer must collect include the dimension/size of homogenizer, model/type, capacity/pressure range, motor size etc.

3.3 Milk Product Packaging

The dairy product packaging has become one of the major incredible innovative solution and technology in all over the world, which growing fast. Nowadays, there are many choices of materials and design of packaging that help to make packaging more beautiful with great quality. Automation packaging is the best packaging solution for all business industry. Modern packaging machines have been equipped with the latest technology that reduces human effort and does work on the robotic system.

The owner of the dairy plant will make sure the machines to be installed in the plant would be the best machine to provide the best packaging solution. There are some factors given below that the dairy plant owner should take into consideration when installing packaging machine:

- It should be good in performance.
- Work at high speed.
- Easy to use and operate.
- Easy to maintenance.
- The size should be adjustable according to space.
- Accommodating several products.
- Space availability.
- The machine parts should be easy to repair.

In the dairy process plant, there are some packing machines best for packaging solution:

i) Cup Filling Machine

The cup filling machine is most widely used in advanced business for the purpose of cup packing of liquid and thick materials such as milk, cream, jam spreads, juice, syrup, mayonnaise, and much more similar products. These machines provide the best quality and user-friendly covered material. The cup filling machines are used mostly in the industry because of their exclusive features like quick filling, forming, sealing and opening.

Figure 22: Sample of Cup Filling and Sealing Machine

ii) Pouch Filling and Sealing Machines

The pouch filling and sealing machines are very commonly used by companies to provide high-quality materials for perfect pouches packing. These machines easily resist the light, moisture, gas and provide the best product. There are many advantages of using this machine.

Figure 23: Sample of Pouch Filling and Sealing Machine

iii) Bottle Filiing and Capping Machines

The bottling machines are used for filling and capping of liquid and semi-liquid products such as UHT Milk, Fresh Milk, Laban, etc. Nowadays, these machines are manufactured with new technology and various features easily available in the market. These machines are being extremely using by bottle packaging in the dairy plant industry to maintain their standard with the best shipment and good safety.

Figure 24: Sample of Bottle Filling and Capping Machine

iv) Pure Pack Packing Machines

The pure pack packing machines are very useful filling and sealed products like milk, cream, juice, yogurt and much more similar products that need safety for a long time. It provides an appropriate filling process for all types of packing containers.

There are some descriptions about the use of packing machines for the different purposes, which will help you to choose the best packing machines to grow the business and for good quality services.

Figure 25: Sample of Pure Pack Packing Machine

3.4 Other Equipment in Dairy Plant

In the dairy process plant, there are equipment and components are frequently used such as piping system, valves, fittings, pumps and tanks.

3.4.1 Piping System

The milk product flows between the components of the dairy plant by means of the pipe system. A dairy plant also has conduit system for other media such as water, steam, cleaning solutions, coolant and compressed air. A waste-water system directed to the drain is also necessary. The difference is in the materials used, the design of the components and the sizes of the pipes.

All the components in contact with the dairy product are made of stainless steel. Various materials are used in the other systems such as cast iron, copper and aluminium. Plastic is used for water and air lines, while ceramic for drainage and sewage pipes. The following types of fittings included in the product piping system are as follows:

- Straight pipes, bends, tees, reduces and unions
- Special fittings such as sight glasses, instrument bends, etc.
- Valves for stopping and directing the flow.
- Valves for pressure and flow control.
- Pipe supports.

Special Pipe Fittings

Sight glasses are fitted in the line where a visual check of the product is required. Bends with instrument connections are used for fitting instruments like thermometers and gauges. The sensor should be directed against the flow to make reading as accurate as possible.

Figure 26: Sample of Piping System in Dairy Plant

3.4.2 Pumps

Formerly, it was often possible to allow liquids to flow through a dairy plant by gravity. Nowadays, they are forced through long pipelines with many valves through heat exchangers, filters and other equipment which often have high pressure drops. The flow rates are frequently high. Therefore, pumps are used in numerous parts of a plant and the need to have the right pump in the right place has become increasingly important. **Figure 27** shown the sample of pumps used in dairy plant.

Figure 27: Sample of Pumps in Dairy Plant

3.4.3 Storage Tanks

Storage tanks are one of the most important equipment in the dairy plant. There are some types of storage tanks used in dairy plant such as silo tanks, intermediate storage tanks and mixing tanks.

i) Silo Tanks

Silo tanks for milk reception fall into the storage category and have been described in the notes above under milk collection and reception at processing facility. They vary in size from 25,000 litres to about 150,000 litres and the wetted surfaces are made of stainless steel. They are often placed outdoors to save on building costs.

In these cases, the tanks are insulated. They have a double shell with a minimum of 70 mm mineral wool insulation in between. The outer shell can be of stainless steel, but for economic reasons, it is usually made of mild steel and coated with anti-corrosion paint. Silo tanks are fitted with various types of agitators and monitoring and control equipment.

The number and size of the silo tanks are determined by factors including the milk intake per day, the number of days per working week, the number of hours per working day (one, two or three working shifts), the number of different products to be manufactured and the quantities involved.

ii) Intermediate Storage Tanks

These tanks are used to store a product for a short time before it continues along the line. They are used for buffer storage, to level out variations in flow. After heat treatment and cooling, the milk is pumped to a buffer tank, and from there to filling. If filling is interrupted, the processed milk is buffered in the tank, until operation can be resumed.

In storage tanks shown in **Figure 28** below, the capacity 1,000 to 50,000 litres the inner shell is made of stainless steel and there is a layer of mineral wool between the shells.

The storage tanks have agitators and fitted with various components and systems for cleaning and for level and temperature control. This equipment is basically the same as previously described for silo tanks.

Figure 28: Sample of Intermediate Storage Tanks in Dairy Plant

4.0 Conclusion

The dairy manufacturing industry in Saudi Arabia has been thoroughly scrutinized and then carefully demarcated by geographic locations which are based on major economic regions and their topographical regions. A high per capita income, growing health-conscious population and increasing interest of women in milk consumption are a few factors that are expected to help maintain the dairy industry growth.

The Saudi Arabian dairy market is highly competitive and consists of a number of major players such as Almarai, Alsafi Danone, Nada Dairy, Nadec, Sadafco,

Najran Dairy Co. Ltd, Arla Foods, FrieslandCampina (Rainbow Milk), United National Dairy Co, Marmum and others. Saudi Arabia is the largest dairy producer in the GCC countries, supported by highest per capita consumption of dairy products in the country. The country has the largest dairy processing plant in the world, producing millions of tons of milk and milk products.

In the valuation of the dairy products manufacturing plant, the first step a machinery and equipment valuer should take is to understand the processes of dairy manufacturing plant from the beginning of the process to the end of the process, i.e. from the source (raw milk in reception area) to the final product (Fresh Milk, UHT Milk, Yogurt, Powder Milk, Cheese, etc). In the dairy manufacturing plant, each product produced will go through a different product process flow and machinery and equipment. Therefore, the valuer will need to identify the types of dairy products produced in the plant before the whole inspection begins.

The valuer should also identify the machines in each section of the dairy manufacturing process. A detailed list of machinery and equipment can also be obtained from the dairy plant owner and an inspection of each machine can be made on the dairy plant.

As a guide to machinery and equipment valuer in valuation of the dairy manufacturing plant, the notes provided above including sample of valuation report for dairy manufacturing plant provided in the **Appendix B** should be referred to**.**

REFERENCES

Eric Goan, Dairy Processing Specialist, University of Tennessee, Dairy Plant and Equipment Considerations.

Sunil M. Patel & A.G. Bhadania, AgriMoon.com, Dairy Plant Design & Layout

Prabhat Kumar Mandal & Ashim Kumar Biswas, 2014, Studium Press (India) Pvt. Ltd., Animal Products Technology.

Mario Scetar, Irena Barukcic, 2018, University of Zagred, Packaging Perspective of Milk and Dairy Products.

Food and Agriculture Organization of the United Nations, Gateway to Dairy production and products extracted from http://www.fao.org/dairy-production-products/products/types-and-characteristics/en/

Mordor Intelligence, Analysis of The Dairy Sector in Saudi Arabia: Major Dairy With The Production, Consumption, Import and Export Data and Trends (2020-2025) extracted from https://www.mordorintelligence.com/industry-reports/dairy-products-in-the-kingdom-of-saudi-arabia-industry

Amna Puri-Mirza, 2020, Statista, Production of Milk and Milk Products in Saudi Arabia in 2015 and 2019 extracted from https://www.statista.com/statistics/582185/production-milk-products-saudi-arabia/

Brandon Gaille, 2019, Saudi Arabia Dairy Industry Statistics and Trends extracted from https://brandongaille.com/21-saudi-arabia-dairy-industry-statistics-and-trends/

Cristine Cerva, 2016, ScienceDirect, Dairy Processing Plant extracted from https://www.sciencedirect.com/topics/agricultural-and-biological-sciences/dairy-processing-plants

Tetra Pak, 2020, Dairy Processing Handbook extracted from https://dairyprocessinghandbook.tetrapak.com/

Goma, 2020, Process Technology and Equipment, Dairy Processing extracted from https://goma.co.in/process-technology-and-equipment/

ABL Technology, 2020, ABL Technology & Solution For Milk Processing, Milk Production & Food Processing extracted from https://abltechnology.wordpress.com/category/milk-processing-equipment-2/

Machine Point Engineering, 2020, Milk Processing extracted from https://www.machinepoint.com/foodtechnologies/machinery.nsf/beverage_technology/milk.html

SPXFLOW, 2020, Separation extracted from https://www.spxflow.com/solutions/separation/

Almarai Annual Report, 2019

ME 405

Advanced Level 2: Applied Machinery and Equipment Valuation – Integrated Project

VALUATION OF INFORMATION TECHNOLOGY (DATA CENTER)

TABLE OF CONTENTS **PAGE**

1.0 Valuation of Information Technology (Data Center)

1.1 Introduction

Data centers are simply centralized locations where computing and networking equipment is stationed for the purposes of collecting, storing, processing, distributing or allowing access to large amounts of data. A data center is physical facility that organizations use to house their critical applications and data. A data center's design is based on a network of computing and storage resources that enable the delivery of shared applications and data.

In the world of enterprise Information Technology (IT), data centers are designed to support business application and activities that include:

- Emails and file sharing.
- Productivity applications
- Customer Relationship Management (CRM) and enterprise Resource Planning (ERP)
- Big data, artificial intelligence and machine learning
- Communications and collaborations services

In the data center, there are two important elements namely data center information (software) and data center infrastructure (hardware). In this module, the notes will only focus and explain data center infrastructure (hardware) which relate to valuation of machinery and equipment.

Data center infrastructure refers to the core physical or hardware-based resources and components including all IT infrastructure devices, equipment and technologies that comprise a data center. It is modelled and identified in a design plan that includes a complete listing of necessary infrastructure components used to create a data center.

A data processing center (data center) is a place where various electronic equipment, especially computers and telecommunications equipment are kept. In practice, almost all medium-sized companies use such a center for data processing for their business operations. For the large companies, they often use dozens of these electronic equipment for data processing.

The databases are often critical for business operations and they are very sensitive therefore need security and protection. For these reasons, data centers must maintain at high levels of security, safety and service in order to ensure the integrity and operation of equipment on the data center site.

2.0 Information Technology (Data Center) in Saudi Arabia

Data center, managed and cloud services are the fastest-growing segments in the Saudi ICT services market. Spending on data center services amounted to SAR609 million in 2014, while spending on managed services was SAR912 million. The overall ICT services market is forecast to expand at a CAGR of 12.4% through 2019, the data center, managed and cloud services market segments are expected to grow far more rapidly over that period, at CAGRs of 13.4%, 18.2% and 36.6% respectively. While the overall ICT services market is predicted to reach SAR19.9 billion, the contribution of these market segments will increase significantly by the end of 2019, surpassing SAR1.1 billion, SAR2.1 billion and SAR898 million respectively, as illustrated in **Figure 1** below.

Source: Communication and Information Technology Commission

Figure 1: Data Center, Managed and Cloud Services 2011-2019 Market Size

Data center, managed and cloud services are driving evolution in the ICT industry. The Saudi ICT service provider ecosystem is developing rapidly, and this will help to fuel growth in the ICT services industry, resulting in better, cheaper and high-quality services for users in the Kingdom. The ICT ecosystem evolution has also taken place in Saudi Arabia. In line with global trends, different types of service provider are looking to diversify and are consequently reinventing themselves, bringing different services to the market and constantly moving forward. To date, communications service providers, internet service provider and satellite internet providers have been the most active. When it comes to data center, managed and cloud services, the Saudi provider landscape is converging. The cloud market in Saudi Arabia is on a growth trajectory, and a number of companies offer cloud services, including one domestic pure-play cloud provider. **Table 1** below lists some of the major providers of these services in the Saudi Arabia.

Table 1: Data Center, Managed and Cloud Service Provider in Saudi Arabia

Provider	Category	Data Center, Managed and Cloud Service Portfolio
STC Advanced Solutions	Communications	Data Center, Managed Services, Cloud Services
Mobily	Communications	Data Center, Managed Services, Cloud Services
ITC	Communications	Data Center
Detecon Al Saudia (DETASAD)	Communications	Data Center, Managed Services
Inteltec	Communications	Data Center
Sahara Net	Communications	Data Center
EXA Serve	Hosting provider	Data Center, Managed Services
NourNet	Hosting provider	Data Center
NashirNet	Hosting provider	Data Center

Source: Communication and Information Technology Commission

In line with global trends, Saudi communications providers have started pushing a portfolio of data center, managed, and cloud services. These companies include telecommunications providers, ISPs, and other communications (such as satellite) providers.

i) Telecommunications Providers

This segment has been active, with Mobily and STC providing a broad range of data center and managed services that play to their strengths in networks, communications, and security. These portfolios are now expanding to include cloud services. Mobily has launched a range of managed and cloud services, mainly by establishing and leveraging partnerships with global vendors like IBM (for private cloud services and managed services) and Virtustream (for public cloud services).

ii) Internet Service Providers (ISPs)

Many ISPs in Saudi Arabia have also been diversifying their portfolios away from solely connectivity and internet services. For example, STC Advanced Solutions (formerly known as Awal IT Services) now has a specific focus on ICT and cloud services. Sahara Net and Nournet are other examples of ISPs that have expanded into data center services and have invested in the construction of new data centers to position data center services within the local market.

iii) Satellite Internet Providers

Saudi Arabia has a number of satellite communications players to cater to the needs of various, often remote regions (e.g., oilfields). These providers are now offering a broader portfolio of ICT services. For example, Detecon

Al Saudia (Detasad) and Inteltec started as satellite communications providers, but now both offer ICT services, specifically datacenter services, and have invested in Saudi-based datacenters to support the delivery of these services.

Most data center providers in Saudi Arabia also have other focus areas. Nournet, Nashirnet and Saharanet, who have recently expanded their portfolios to include a wider range of data center services, still provide their traditional ISP portfolio of services. Mobily, through its partnership with global cloud providers like IBM and Virtustream, has developed a broader cloud service portfolio. Other local data center providers, like Detecon Al Saudia or Saudi Intl'tec offer Very Small Aperture Terminal (VSAT) satellite services, network integration services along with outside plant (OSP) engineering services

3.0 Components in Information Technology (Data Center)

An organization's data center facility is a controlled physical environment for storing and managing its servers, networks, and other computer equipment. In a small organization, a data center may be just a small "closet" that houses a single server and network patch panels. In larger organizations, on the other hand, a data center generally includes a raised floor space that houses most of the organization's ICT systems and supports enterprise-wide operations.

Data centers are usually classified according to the way they are designed and built. The Uptime Institute categorizes data centers into four tiers (1–4). These tiers signify the varying levels of redundancy and availability of data within a data center, with Tier 4 being the highest level.

The most widely adopted standard for data center design and data center infrastructure is American National Standards Institute (ANSI)/Telecommunications Industry Association (TIA), ANSI/TIA-942 ready certification which ensures compliance with one of four categories of data center tiers rated for levels of redundancy and fault tolerance.

Tier 1: Basic Infrastructure:
A tier 1 data center offers limited protection against physical events. It has single capacity components and a single nonredundant distribution path.

Tier 2: Redundant Capacity Component Site Infrastructure:
This data center offers improved protection against physical events. It has redundant capacity components and a single nonredundant distribution path.

Tier 3: Concurrently Maintainable Site Infrastructure:
This data center protects against virtually all physical events, providing redundant capacity components and multiple independent distribution paths.

Each component can be removed or replaced without disrupting services to end users.

Tier 4: Fault Tolerant Site Infrastructure:
This data center provides the highest levels of fault tolerance and redundancy. Redundant capacity components and multiple independent distribution paths enable concurrent maintainability and one fault anywhere in the installation without causing downtime.

Data centers can also be classified based on ownership into captive and non-captive. Captive data centers are owned and operated by an organization to support its own activities. These can be managed and maintained by the organization's internal IT department, an ICT service provider, or a combination of the two. Non-captive data centers are wholly outsourced. In the case of a non-captive data center, a service provider builds a data center and leases space to its client organizations, allowing them to host their applications and/or infrastructure without having to build their own (captive) data centers.

The services offered by a provider from its data center are broadly referred to as data center services. They include the hosting of servers, storage devices, applications, content, and networking equipment. The most common types of data center services are co-location hosting (sometimes referred to as housing services), managed hosting, webhosting, and hosted application services. Demand for data center services has experienced rapid growth, globally and locally, due to an increasing number of organizations looking to avoid the high capital outlays and operational costs involved in building and operating self-owned data centers.

There are many types of data centers and service models available. Their classifications depend on whether they are owned by one or many organizations and how they fit into the topology of other data centers and what the technologies they use for computing and storage and even their energy efficiency. There are four main types of data centers:

i) Enterprise Data Centers
These are built, owned and operated by companies and are optimized for their end users. Most often they are housed on the corporate campus.

ii) Managed Services Data Centers
These data centers are managed by a third party (or managed services provider) on behalf of a company. The company leases the equipment and infrastructure instead of buying it.

iii) Colocation Data Centers
In colocation data centers, a company rents space within a data center owned by others and located outside company premises. The colocation

data center hosts the infrastructure such as building, cooling, bandwidth, security, etc. While the company provides and manages the components including servers, storage and firewalls.

iv) Cloud Data Centers

In this off-premises form of data center, data and applications are hosted by a cloud services provider such as Amazon Web Services, Microsoft or IBM Cloud.

A data center infrastructure may include:

- Servers
- Routers
- Switches
- Computers
- Firewall
- UPS – Uninterruptible Power Supply.

It can also include non-computing resources or physical components such as:

- Raised floor inside the data center
- Power and cooling devices, such as air conditioners or generators
- Physical server racks/chassis
- Cables
- Pipes for cables below and above the floor
- Fiber optic links between sites or between switches, routers and firewall.
- Internet backbone
- Emergency Power Supply and a backup unit in the data center
- System sophisticated fire alarm
- Automatic fire extinction by droplets or inert gas
- Security Monitoring by CCTV cameras in the data center
- Access control and physical security.

3.1 Servers

A physical server is a piece of equipment that provides some type of functionality to other devices. There are also software-based servers, but that is a less common definition when understanding the servers. Having servers makes it easier for a large number of people to access the same data or other functions without needing full functionality on each PC or another device. In addition, servers are typically much more powerful and have more system resources than would be practical on a normal computer.

3.1.1 Types of Servers

There are several different ways to classify servers based on type. In many situations, it makes sense to look at servers based on the function they perform. For example, there are storage servers, database servers, application servers, print serves and others.

Another way to classify a server is by the physical hardware it uses. Many traditional servers look and operate just like a normal PC but run server software so that other computers can access it. There are also larger, more powerful servers that have similar components to a normal PC, but with additional power. For example, these servers may have significantly more RAM, additional physical CPUs and more disk space than what you would find in a normal computer.

The type of server hardware may depend on the dedicated service that server provides, as some hardware is better suited for certain purposes. There are several types of servers used in market such as rack servers, blade servers, tower servers and mainframes.

i) Rack servers

Rack servers are designed to be mounted in a modular rack design for efficient management and storage. Rack servers are very versatile in their ability to manage different tasks and workloads and they can maximize utility in one dedicated location.

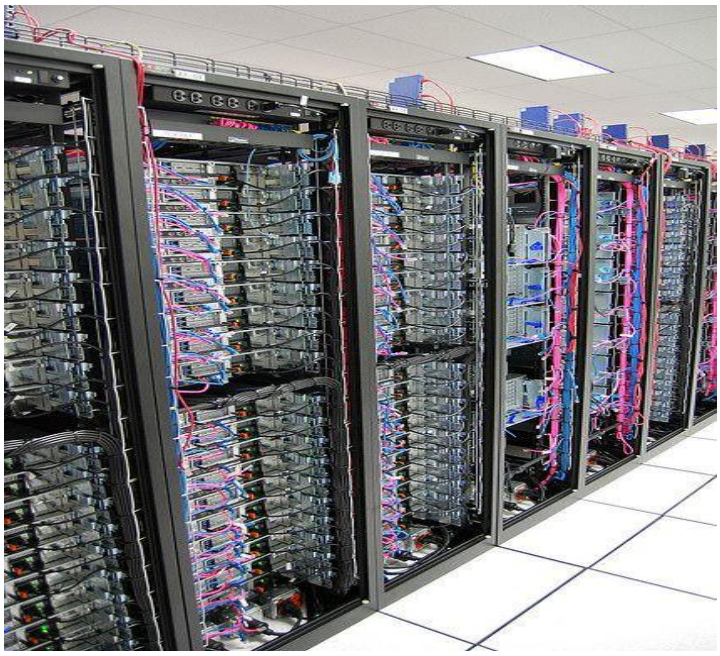

Figure 2: Rack Servers

A major advantage to rack servers is the ease with which server components can be removed if necessary. Some businesses may desire a more modular design for ease of replacement especially if that business is running a large operation with servers that may become defunct at different times.

Generally, rack server bays are stacked tightly, efficient cooling can be a challenge. Rack servers require a fair amount of cabling which can be an added challenge especially in smaller spaces.

ii) Blade Servers

Blade servers are chassis-based servers similar to rack servers but the more stripped-down design allows for even more space efficiency than rack servers among the key advantages.

These server systems are comprised of individual server “blades”, thin dedicated server boards that each has individual processing power, memory capacity and a simple modular design that allows for easy configurability.

Blade servers are very popular today because they take up much less space than a traditional server. All the components needed in each ‘blade’ are built on, then the blade is pushed into a blade chassis. Each chassis can hold multiple blades and fits securely into a server rack for ease of access and improved security.

Figure 3: Blade Servers

iii) Tower Servers

Tower servers are singular computers with the dedicated purpose of a server. They are housed in a standalone upright cabinet or tower, much like the tower of a personal desktop computer.

Tower servers provide their own unique advantages due to the low interior component density; they are easier to cool than rack or blade servers. The encased design allows room for more hardware or drive installation if necessary. While blade servers and rack servers feature

neat, modular rack designs for tower servers are much less space efficient. A set of tower server will be much heavier and space consuming than their thinner counterparts. Cable management can be complicated and bulky and the air cooling from the tower fans can be noisy.

Figure 4: Tower Servers

When conducting valuation of servers, the valuer should obtain the server information available in the data center or premises. Among the information that valuer needs to obtain on site are server types, models, specifications and number of servers.

3.1.2 Server Rack

A server rack is a structure that is designed specifically to house technical equipment including routers, switches, hubs and servers. The rack makes it possible to securely hold multiple pieces of equipment in one area. Server racks are typically going to be used by businesses and kept either in the data centers or communications closets.

Those who operate data centers rely on server racks because they provide many benefits that wouldn't be possible without this type of equipment. The most significant advantages include the following:

i) Organization

Server racks are typically tall structures that can hold many pieces of equipment in one location. This helps keep things organized and maximizes the use of floorspace. Multiple racks can also be installed side-by-side in long rows.

ii) Wire Management

A good quality chassis will be designed to help with wire management. It is possible to run hundreds of power, network and other cables through these racks while keeping them safe and organized.

iii) Efficient Cooling

Keeping IT equipment cool is often a big challenge, but a server rack will really help with that goal. These racks are designed to make airflow easy and can include fans and other cooling equipment when necessary.

iv) Security

Server racks are made of strong metal and will usually come with locks on the doors to prevent unauthorized access. The doors also help to prevent accidental bumping or touching of power buttons or cables which could cause problems.

3.1.3 Types of Server Racks

There are many multiple types of server racks on the market today, each designed for different sizes and types of equipment. These different types are usually manufactured based on the physical dimensions and how many units of equipment the rack can hold. Several types of server racks are as follows:

- Glass Door Rack
- Mesh Door Rack
- Open Frame Rack
- Wall Mount Rack

When conducting valuation of server racks, the valuer should obtain the server racks information available in the data center or premises by record the measurement size (Width X Length X Hight) and the material, type of server racks and number of racks.

	
Glass Door Rack	**Open Frame Rack**
	
Wall Mount Rack	**Mesh Door Rack**

Figure 5: Type of Server Rack

3.2 Routers

A router is hardware device designed to receive, analyse and move incoming packets to another network. It may also be used to convert the packets to another network interface, drop them and perform other actions relating to a network.

A router has a lot more capabilities than other network devices, such as a hub or a switch that are only able to perform basic network functions. For example, a hub is often used to transfer data between computers or network devices, but does not analyse the data being sent over a network, change how it is packaged and send it to another network or over a different network. For example, routers are commonly used in home networks to share a single internet connection between multiple computers and other devices.

A router essentially guides data traffic over a computer network, reading the network address information on incoming data packets and routing them to the proper destination. Depending on the nature of that data and the complexity of

the networks involved, there are many different types of routers that might be used by centers include core routers and edge routers.

3.2.1 Types of Routers

i) Core Routers

Core routers are responsible for directing data traffic within network. They are designed with high-speed interfaces to forward traffic through the network as quickly as possible. Since they are handling data packets that are already supposed to be within the network and to many destinations which core routers can be optimized for high bandwidth and speed.

Figure 6: Core Routers

ii) Edge Routers

Edge routers must serve a broader array of functions. They are the gateway connecting the local network to the external, wide area network (WAN). All data packet coming into a network must go through the edge router. Since the inbound data is coming from a wider array of sources, this router needs to be able to filter and queue everything before it can be directed to the network's core routers.

An edge router is ultimately responsible for the security of the network. It is the first point of contact with the outside world, making it an ideal location for firewall systems that screen out dangerous content and unauthorized access requests.

Edge Routers in Edge Data Centers

Edge data centers are designed to interface with external devices and users. The role of edge routers is incredibly important. They are the point in a data center environment where all customer and device connections enter and leave the internal network. High availability and redundancy are critical because these routers are potential choke points for all traffic.

Multi-tenant data centers have a wide array of data packets flowing into the facility, so edge routers will process multiple types of routing protocols. This is even more important in an edge data center, where huge amounts of data from IoT devices are flowing into the network to be sorted for processing or transfer to another data center. Some of these devices even function as extensions of a network, which can put a great deal of strain on edge routers that are effectively serving as core routers.

Edge data centers need to be equipped with powerful and versatile edge routers that can handle the increased volume of incoming traffic with minimal latency. They also need to feature more redundancy than one might find in a traditional data center because a failed router could result in significant downtime.

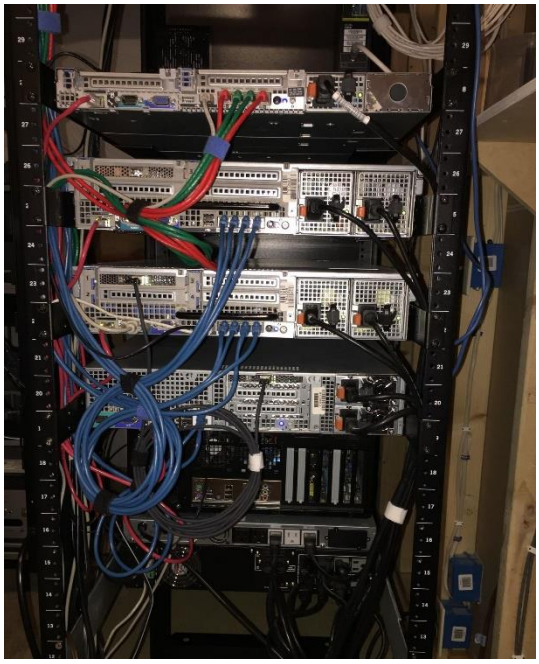

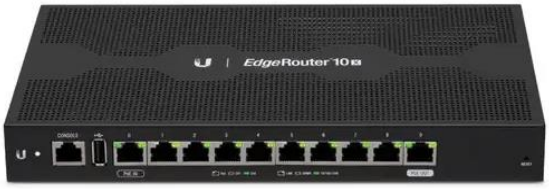

Figure 7: Edge Routers

When conducting valuation of router equipment, the valuer should obtain the routers information available in the data center just the same way as servers, information such as router types, models, specifications and number of routers.

3.3 Switches

A network switch or switching hub is networking hardware that connects devices on a computer network by using packet switching to receive and forward data to destination device. Multiple data cables are plugged into a switch to enable communication between different networked device connected to a switch can be identified by its network address allowing the switch to direct the flow of traffic maximizing the security and efficiency of the network.

Many data center adopt a leaf/spine architecture, which eliminates the aggregation layer. In this design, servers and storage connect to leaf switches (edge switches) and every leaf switch connects into two or more spine (core) switches. This minimizes the number of hops data has to take getting from source to destination and thereby reduces the time spent in transit.

Some data centers establish a fabric or mesh network design that makes every device appear to be on a single, large switch. This approach reduces latency to its minimum and is used for highly demanding applications such as high-performance computing in financial services or engineering.

3.3.1 Types of Networking Switches

There are several types of switches in networking in addition to physical devices:

i) Virtual Switches

A virtual switch (vSwitch) is a software application that allows communication between virtual machines. A vSwitch does more than just forward data packets, it intelligently directs the communication on a network by checking data packets before moving them to a destination.

Virtual switches are usually embedded into installed software, but they may also be included in a server's hardware as part of its firmware. A virtual switch is completely virtual and can connect to a network interface card. The vSwitch merges physical switches into a single logical switch. This helps to increase bandwidth and create an active mesh between server and switches.

Figure 8: Virtual Switches

ii) Routing Switches

A routing switch is a specialized type of switch that also performs many of the tasks of a router. Routing switches are very similar to a typical router and in many cases, they also inspect the incoming/outgoing network traffic, support of all major routing protocols and most of the routing of data/traffic to the next hop/router. However, routing switches also include switching abilities and can forward data according to a device's physical address. The main difference between a routing switch and a router is in their hardware structure, as the routing switch incorporates the functionality of both a switch and router but uses hardware routing, whereas typical routers use software routing.

Figure 9: Routing Switches

iii)Managed and Unmanaged Switches

A managed switch is a device that can be configured and properly managed to offer a more tailored experience to those who will be utilizing the box. These not only offer tools and the means to monitor the network, but also control over traffic. Managed switches are very much like Virtual Private Servers where you'll be in charge of setting everything up, managing the device and take responsibility for any configurations that cause downtime.

Managed switches can be administered through a supported method, whether it be a command-line interface, a web interface loaded in your web browser or Simple Network Management Protocol (SNMP) for remote access. Managed switches also designed for intense workloads, high amounts of traffic and deployment where custom configurations are a necessity.

An unmanaged switch works with no input from you. These networking devices will work in the most basic form, allowing for your devices to connect with one another. The configuration is locked to OEM specification and provides consumers peace of mind to connect everything up and get going. Unmanaged switches are best suited for home and small office use.

Figure 10: Managed and Unmanaged Switches

When conducting valuation of switches the valuer should obtain the switches information available at the data center such as switches types, models, specifications, numbers of switches per port and number of ports.

3.4 Computers

Computer hardware equipment refers to all the parts of a computer and its accessories. These are the monitor, keyboard, central processing unit (CPU) and mouse. Hardware is typically directed by the execute any command or instruction. A combination of hardware and software forms a usable computing system, although other systems exist with only hardware.

The CPU, which performs most of the calculations which enable a computer to function and is referred to as the brain of the computer which get a hold of program instruction from random access memory (RAM), interprets and processes it and then send it backs to computer result so that the relevant components can carry out the instructions.

At the data center, each server is a high performance computer with memory, storage space, a processor or processors and input/output capability, kind of like a souped-up version of a personal computer but with a faster and more powerful processor, memory and usually without a monitor, keyboard or the other peripherals you would use at home. Monitors might exist in a centralized location, nearby or in a separate control room for the monitoring groups of servers and related equipment.

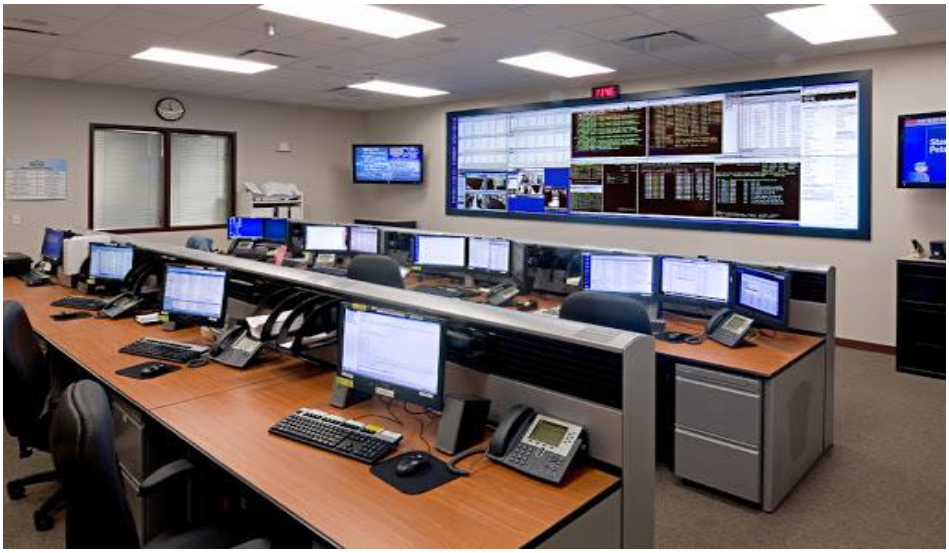

Figure 11: Sample of Control Room for Data Center with Computer

When valuing machinery and equipment of computer system, normally the valuers are required to value hardware equipment only of computer and not including the software system. In this case, the valuer must value the whole computer as a single unit not as single items such as monitor, keyboard, central processing unit (CPU) and mouse. However, valuation of computer items such as monitors, mouse, keyboards and servers can be made separately if the monitor, keyboards and mouse are located in different locations. Whether valuer needs to value the whole computer unit or separate components depends on the layout of the computer equipment in the data center.

3.5 Firewalls

A firewall is a network security device that monitors incoming and outgoing network traffic and permits, or blocks data packets based on a set of security rules. Its purpose is to establish a barrier between your internal network and incoming traffic from external sources in order to block malicious traffic like viruses and hackers.

Firewalls carefully analyse incoming traffic based on pre-established rules and filter traffic coming from unsecured or suspicious sources to prevent attacks. Firewalls guard traffic at a computer's entry point, called ports which is where information is exchanged with external devices.

3.5.1 Types of Firewalls

Firewalls can either be software or hardware equipment or the best is to have both. A software firewall is a program installed on each computer and regulates

traffic through port numbers and applications, while a physical firewall (hardware) is a piece of equipment installed between your network and gateway.

Packet-filtering firewalls are the most common type of firewall, examine packets and prohibit them from passing through if they don't match an established security rule set. This type of firewall checks the packet's source and destination IP addresses. If packets match those of an "allowed" rule on the firewall, then it is trusted to enter the network.

i) Next-Generation Firewalls (NGFW)

NGFW combine traditional firewall technology with additional functionality, such as encrypted traffic inspection, intrusion prevention systems, anti-virus, and more. Most notably, it includes deep packet inspection (DPI). While basic firewalls only look at packet headers, deep packet inspection examines the data within the packet itself, enabling users to more effectively identify, categorize, or stop packets with malicious data.

ii) Proxy Firewalls

Proxy firewalls filter network traffic at the application level. Unlike basic firewalls, the proxy acts an intermediary between two end systems. The client must send a request to the firewall, where it is then evaluated against a set of security rules and then permitted or blocked. Most notably, proxy firewalls monitor traffic for layer 7 protocols such as HTTP and FTP and use both stateful and deep packet inspection to detect malicious traffic.

iii) Network Address Translation (NAT) Firewalls

NAT firewalls allow multiple devices with independent network addresses to connect to the internet using a single IP address, keeping individual IP addresses hidden. As a result, attackers scanning a network for IP addresses can't capture specific details, providing greater security against attacks. NAT firewalls are similar to proxy firewalls in that they act as an intermediary between a group of computers and outside traffic.

iv) Stateful Multilayer Inspection (SMLI) Firewalls

SMLI filter packets at the network, transport, and application layers, comparing them against known trusted packets. Like NGFW firewalls, SMLI also examine the entire packet and only allow them to pass if they pass each layer individually. These firewalls examine packets to determine the state of the communication (thus the name) to ensure all initiated communication is only taking place with trusted sources.

Figure 12: Sample of Next Generation Firewall

When conducting valuation of firewall equipment, the valuer should obtain the firewalls information available in the data center such as firewalls types, models, specifications and number of firewall units.

3.6 Uninterruptible Power Supply (UPS)

UPS is an electrical storage device that provides temporary electrical power in the case of power failure. The UPS systems are used from desktop computers to a large data center, providing adequate power solutions. It is essential to deploy the data center with a reliable UPS system as electrical power is not stable and various electrical anomalies can interrupt a server operation.

The UPS comprises of an electrical storage unit such as a battery or a flywheel. A UPS is integrated with the power system in such a way that when the main power supply is active, UPS is on standby mode and charges its battery. As soon as the main power supply is interrupted, the UPS takes over the supply mode and becomes the primary source of power. This way the power over all the devices and equipment run seamlessly. In the data centers, UPS systems are used for just a few minutes until electrical generators take over the power supply.

UPS systems can be set up to alert file servers to shut down in an orderly manner when an outage has occurred, and the batteries are running out. UPS is typically used to protect hardware such as computers, data centers, telecommunication equipment or other electrical equipment where an unexpected power disruption could cause injuries, fatalities, serious business disruption or data loss. UPS units' range in size from units designed to protect a single computer without a video monitor (around 200 volt-ampere rating) to large units powering entire for data centers.

Selecting the UPS appropriately for your environment helps you in reducing the costs as well as improving the productivity. There are essentially three types of UPS models:

i) Standby UPS (Offline)

It is the simplest type of UPS systems. The standby UPS is offline until the main supply is disconnected. It does not provide protection from electrical disturbances like surges. These are practically limited to desktop systems.

ii) Line Interactive

In contrast to the standby UPS, the line interactive UPS is active even while the main power supply is connected. With the help of an inductor, it helps in filtering out the electrical disturbances. It helps reduce the transient events when switching from main power to battery power.

iii) Double Conversion UPS (Online)

This type of UPS systems provides the highest level of protection due to its double conversion process. It converts all incoming AC power to DC. Some of the DC power is supplied to the battery for charging and the rest is converted back to AC power. Due to this double conversion, no amount of electricity is incident directly on the server which provides full protection to the equipment. In big corporate data centers where a lot of expensive equipment is installed that is most trusted form of UPS systems.

3.6.1 Generator & UPS Compatibility

Due to the nature of the supply from a generator we recommend utilizing online double conversion technology UPS. Online UPS have improved input frequency and voltage tolerance over non-online technology, therefore preventing frequent switching to battery power which maximizes battery life and UPS reliability. Because online double conversion technology completely regenerates the AC output it will be completely free from interference such as spikes and voltage variations which may adversely affect IT or other types of sensitive equipment.

Non-online UPS will often work, although intermittently, with a generator supply but will ultimately fail. Usually the UPS failure happens under load or when the generator is providing the main supply. A generator backed supply is often a critical one and necessitates the highest form of protection, online double conversion technology provides this protection.

Figure 13: Sample of UPS in the Data Center

When conducting valuation of UPS equipment, the valuer should obtain the UPS information available in the data center such as UPS types, models, capacities, specifications and number of UPS units.

3.7 Non-Computing Physical Components in the Data Center

In the data centers, there are several non-computing physical components which are support equipment or components for computing system in the data center such as:

3.7.1 Raised Floor Inside Data Center

A raised floor in the data center is an elevated floor that is built from two inches to four feet above a concrete floor. It creates a space that can be used for cooling, electrical and mechanical services. In the data centers, raised floors are also used as a way of distributing cold air. By using a raised floor, facilities not only reduce the amount of air needed to cool equipment, they also require less energy and improve temperature distribution across all the cabinets.

According to research on the impact of raised floors on thermal behaviour in commercial buildings, the presence of a raised floor can potentially reduce the cooling load by as much as 40%.

i) Keeping Cool

Server in the data centers generate a huge amount of heat, presenting a major problem for data center designers and managers. When servers overheat, a common reaction is to consider getting extra cooling capacity, which assumes that the existing cooling infrastructure isn’t capable of maintaining a proper temperature. In reality, the problem may not be the result of insufficient capacity, but rather poor airflow management.

To keep the data center cool, a common practice is to install perforated raised floor tiles within cold aisles. These perforated tiles typically are not installed in hot aisles, unless there is a maintenance tile in place. These maintenance tiles give employees access in a warmer environment, so they can work in comfort. However, maintenance tiles should not remain in place permanently as they restrict air flow.

Sometimes grates are used as a quick fix for hot spots in a data center. However, since a grate can allow up to three times more air than the perforated raised floor tile, using them will exacerbate the issue. Managing the placement of raised floor tiles is critical. If there is not enough tiles installed, the air can begin to recirculate. If too many tiles are installed, it can allow air bypass. If a choice must be made between recirculation and bypass, then bypass is preferable.

ii) Cabling and Additional Equipment

Having a raised floor in a data center also makes it easier to do equipment upgrades or install completely new equipment. This can include the installation of cabling and redeveloping the premises for other purposes. A raised floor is a good design strategy when there is a large amount of data center cabling to run. This is more efficient and can cost less than systems that are mounted near the ceiling. It can also help with the number of hidden cables and consolidation of physical ports and power plugs.

Running data cabling under the raised floor tiles also helps to keep the data floor uncluttered and neat. Without overhead wiring systems in place, there’s nothing to block light fixtures and data center technicians don’t need a ladder to access cabling. Making a change to data center cabling is a simple matter of identifying the correct floor panel and removing it rather than accessing overhead trays that are located close to servers, light fixtures, and sprinkler systems.

iii) Flexible Design

When setting up an initial design of a raised floor, data center engineers should consider the facility’s future development needs. This makes it easier to factor in the amount of free space needed to install both current and future equipment. The space beneath the raised floor tiles should be designed to allow cool air to circulate efficiently. Once a floor is installed, it’s critical for data center personnel to perform regular maintenance on the area, which includes taking special care to make sure it stays clean.

Since cold air can be channelled under the floor, a data center with a raised floor offers more versatility in terms of equipment deployment than a slab-based design. Rather than bolting the cabinets to the slab and directing

cooling from above, raised floor tiles are more modular, allowing the facility to relocate equipment without the need to install new cooling infrastructure overheat.

iv) Raised Floor Tile Maintenance

Cleaning underneath raised floor tiles helps keep out pollutants that could potentially pose a hazard to operations. Dust can get underneath the raised floor tiles and flow into equipment. The good news is that most data centers adhere to a regular policy of cleaning underneath the raised floors. This ensures the space created beneath the raised floor tiles is clean and free of contaminants, reducing the amount of dirty air getting pushed into the servers, which can increase the risk of equipment failure.

Cabling layout is very important in a facility with a raised floor. Just because the cabling will be out of sight doesn't mean it can be out of mind as well. If too many cables are piled up in any area, they could significantly restrict or even block airflow, preventing some equipment from getting the cooling resources it needs. Data center managers need to carefully monitor how cables are arranged, especially when new lengths are being laid down or existing cabling needs to be replaced.

Raised floors may be one of the oldest design standards found in the data centers, but they remain a popular strategy for managing cooling needs and cable deployment. By maximizing the potential of raised floors, data center managers can ensure that their facilities will remain efficient and effective for many years to come.

Figure 14: Sample of Raised Floor in the Data Center

3.7.2 Cabling in the Data Center

Cables are an integral part of any network. Data center use various types of cables; copper cables, fiber optics, AC/DC power, and ground Cables. There are many factors involved in determining the best cable type for a data center. Analysing the interface of equipment used in the data center and bandwidth requirements are some of the factors.

There are two ways for the cabling process in the data center which is structured and unstructured. Structured cabling is more of a predefined standard based design in which pathways and connection points are also predefined. Furthermore, it is tested to guarantee proper performance. The structured design has well-ordered and categorized cables. The installation of a structured design takes more time and money because it is all organized and systemic. But the operational cost of this design is low and it is durable for long runs as compared to unstructured design.

In unstructured cabling design, there are no predefined standards, connection points, or pathways. It is done from point to point. There can be cooling issues in this design because of the restricted airflow. The energy cost can be higher with this design. The management of this design can be difficult because there is no plan to change cable locations. The lifecycle of this design is short. Now the installation cost is low for unstructured cabling design, but the operational cost is very high for this kind of system. Organizations use both copper cables and fiber optics to improve data center deployment. In this article, you'll get to know about these cables and their unique features.

Figure 15: Sample of Cabling in the Data Center

i) Copper Cables

Now copper cables might not be as good as fiber optics but they certainly have their benefits. Fiber optic cables do not face electromagnetic interference issues because they emit photons and that is why signals from these cables can travel at a longer distance. There is no doubt that fiber optics provide faster communications but we cannot replace copper cables entirely with them. Copper cables have low cost and it increases performance.

The ranging of the cables generally depends on the speed of the network. However, this cable is enough to cover all the connections inside the data center. Copper cables have the capability of transmitting data at the highest bandwidth. Theses cables offer connections consistently and reasonably.

Another good feature of copper cable is that they are cost-efficient as compared to the fiber optics. These cables are approximately 2 to 5 times less costly than active cables. Power saving is another cool feature that copper cable comes with. Due to its thermal design, it needs less amount of power for cooling. Data centers can save a lot of energy by using these cables.

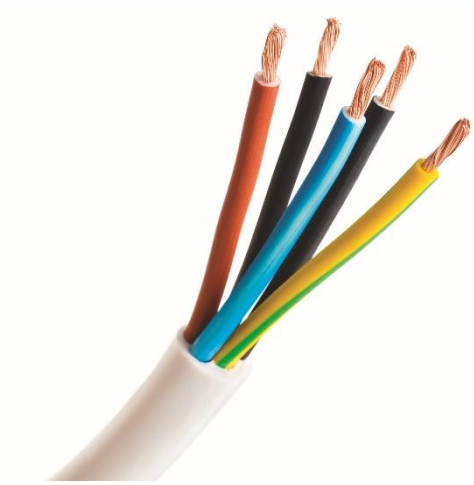

Figure 16: Cooper Cable

ii) Fiber Optics Cables

The copper cables provide connections between the equipment that is placed in a single rack. The range of the copper cable is between 7 to 10 meters.

Fiber optic cables have electronics and optics in the connectors instead of wires in them. This feature allows the fiber optic to cover more distance. The connectors at both ends of the cable convert the electrical

signals to optical signals and another way around. This active fiber optic cable is equally good for both intra-and inter-rack applications.

The fiber optic has the same data rate as copper cable but it is lighter and thinner than copper cable. The fiber optic does not have any shielding which makes them less bulky than the copper cables. Its bend radius is also smaller. All these features give more flexibility for the data center configuration.

Figure 17: Fiber Optic Cable

3.7.3 Cooling Devices – Air Conditioning System

The air conditioning systems that provide for environmental control of temperature, humidity and air contaminant are essential to the data centers. Data centers are dedicated facilities which support business critical IT servers. It is packed with server racks which generating exponentially more computer power and most of this is converted into rejected heat.

Data centers generate massive amounts of information about their power and cooling demands. The most efficient facilities have harnessed that data to model trends and usage patterns, allowing them to better manage their data center power and cooling needs.

In the data center, there are several types of cooling infrastructure commonly used and new data center cooling technologies such as:

i) Calibrated Vectored Cooling (CVC)

A form of data center cooling technology designed specifically for high-density servers. It optimizes the airflow path through equipment to allow the cooling system to manage heat more effectively, making it possible to increase the ratio of circuit boards per server chassis and utilize fewer fans.

ii) Chilled Water System

A data center cooling system commonly used in mid-to-large-sized data centers that uses chilled water to cool air being brought in by air handlers. Water is supplied by a chiller plant located somewhere in the facility.

Figure 18: Sample of Chilled Water System

iii) Cold Aisle/Hot Aisle Design

A common form of the data center server rack deployment that uses alternating rows of “cold aisles” and “hot aisles.” The cold aisles feature cold air intakes on the front of the racks, while the hot aisles consist of the hot air exhausts on the back of the racks. Hot aisles expel hot air into the air conditioning intakes to be chilled and then vented into the cold aisles. Empty racks are filled by blanking panels to prevent overheating or wasted cold air.

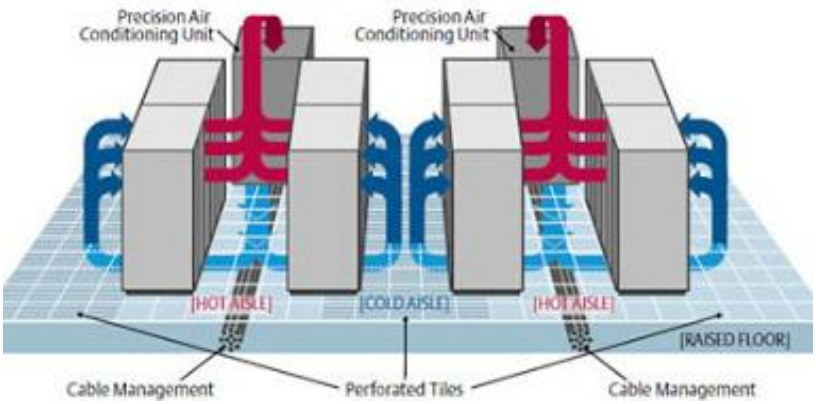

Figure 19: Hot Aisle/Cold Aisle Design

iv) Computer Room Air Conditioner (CRAC)

One of most common features of any data center, CRAC units are very similar to conventional air conditioners by powered by a compressor that

draws air across a refrigerant-filled cooling unit. They are quite inefficient in terms of energy usage but the equipment itself is inexpensive.

Figure 20: Sample of Computer Room Air Conditioner (CRAC)

v) Computer Room Air Handler (CRAH)

A CRAH unit functions as part of a broader system involving a chilled water plant (or chiller) somewhere in the facility. Chilled water flows through a cooling coil inside the unit, which then uses modulating fans to draw air from outside the facility. Because they function by chilling outside air, CRAH units are much more efficient when used in locations with colder annual temperatures.

Figure 21: Sample of Computer Room Air Handler (CRAH)

vi) Direct to Chip Cooling

A data center liquid cooling method that uses pipes to deliver coolant directly to a cold plate that is incorporated into a motherboard's

processors to disperse heat. Extracted heat is fed into a chilled-water loop and carried away to a facility's chiller plant. Since this system cools ling.

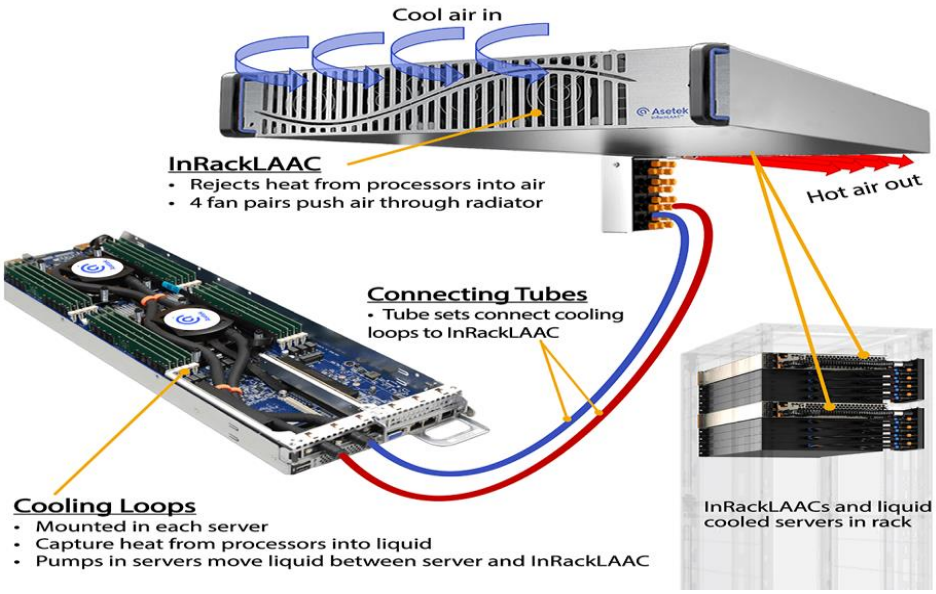

Figure 22: Sample of Direct to Chip Cooling

vii) Evaporative Cooling

Manages temperature by exposing hot air to water, which causes the water to evaporate and draw the heat out of the air. The water can be introduced either in the form of a misting system or a wet material such as a filter or mat. While this system is very energy efficient since it doesn't use CRAC or CRAH units, it does require a lot of water. Data center cooling towers are often used to facilitate evaporations and transfer excess heat to the outside atmosphere.

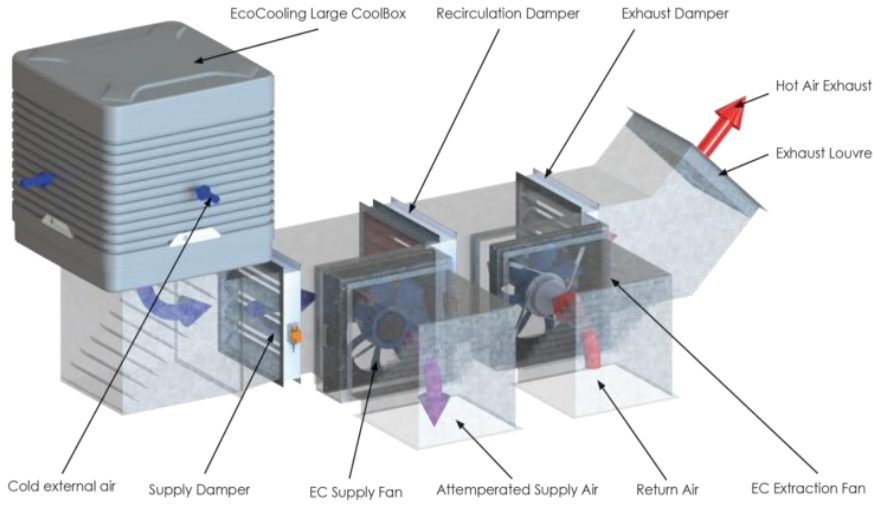

Figure 23: Sample of Evaporative Cooling

viii) Free Cooling

Any data center cooling system that uses the outside atmosphere to introduce cooler air into the servers rather than continually chilling

the same air. While this can only be implemented in certain climates, it's a very energy-efficient form of server cooling.

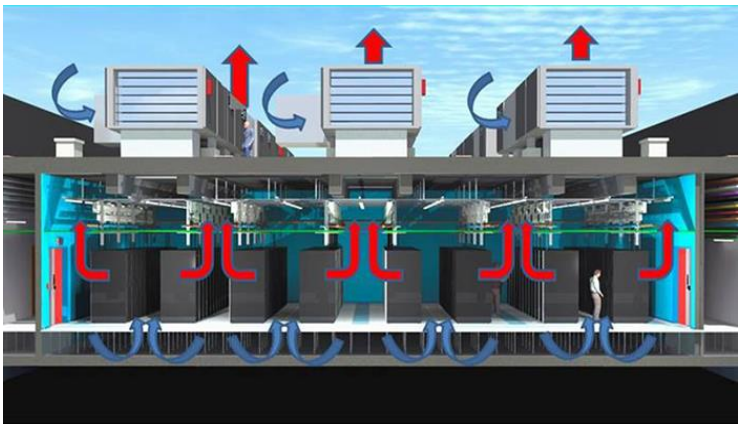

Figure 24: Sample of Free Cooling

ix) Immersion System

An innovative new data center liquid cooling solution that submerges hardware into a bath of non-conductive, non-flammable dielectric fluid.

Figure 25: Sample of Immersion System

x) Liquid Cooling.

Any cooling technology that uses liquid to evacuate heat from the air. Increasingly, data center liquid cooling refers to specifically direct cooling solutions that expose server components (such as processors) to liquid to cool them more efficiently.

Figure 26: Sample of Liquid Cooling

xi) Raised Floor

A frame that lifts the data center floor above the building's concrete slab floor. The space between the two is used for water-cooling pipes or increased airflow. While power and network cables are sometimes run through this space as well, newer data center cooling design and best practices place these cables overhead.

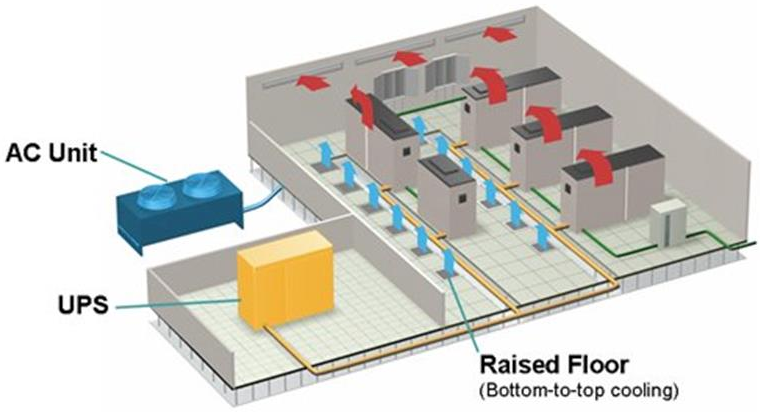

Figure 27: Raise Floor Concept Cooling System

The air conditioning system has also been taught in ME 403 module. It covers type of air conditioning system, new invented technology for air conditioning system and chilled water system. Participants can refer to the notes in ME403 module for better understanding of functions and structures of the air conditioning systems.

3.7.4 Power Supply

Assessing power requirements is one of the important tasks for any organization must consider when it decides to build a data center. The power supply of every larger data center starts with a connection to the main grid, which is provided by the local utility company.

A data center's electrical system should incorporate some level of redundancy that includes uninterrupted power supply (UPS) battery systems and a backup generator that can provide enough megawatts of power to keep the facility running if the main power is disrupted for any length of time. Should the power ever go out, the UPS systems will keep all computing equipment up and running long enough for the generator to come online. In many cases, data center power infrastructure incorporates more than one electrical feed running into the facility, which provides additional redundancy.

Colocation facilities also have clearly defined power specifications that indicate how much power they can supply to each cabinet. For high-density deployments, colocation customers need to find a data center infrastructure able to provide between 10 to 20kW of power per cabinet.

Data centers provide power to more than just servers. In fact, data center power design accommodates systems that make its infrastructure possible. Air handlers, cooling & ventilation system, lighting, environmental controls, fire suppression system, security alarms, surveillance cameras and sensor all take up a substantial amount of power. Emergency power systems, such as uninterruptible power supply (UPS) need to be charged as well.

Figure 28: Electrical Room – Power Supply for Data Center

The power supply system has also been taught in ME403 module. It covers electrical system, substation components including standby generator set. Participants can refer to the notes in ME403 module for better understanding of the structures of the electrical power supply systems.

3.7.5 Fire Suppression Systems

In the data center, fire-fighting facilities used is different the fire-fighting facilities for buildings. The primary fire protection systems used within the data centers typically include wet pipe sprinklers, pre-action sprinklers, and special suppression (i.e., clean agent, inert gas, or water mist).

A wet pipe sprinkler system is the most basic sprinkler system option. This system, however, is always water-filled and is therefore usually not a preferred approach in the data centers. These pipes have the potential for false discharge and water leaks or pipe failure, which could damage equipment and disrupt service. Welded pipe systems are preferred, although mechanical pipe connections are still found in many older facilities.

Two water-based fire suppression methods are typically preferred for data centers which is single and double interlock systems. Single interlock systems rely on a separate event such as a smoke detector to activate before water is released into the system. In this case, if an individual sprinkler were to fail or break due to mechanical damage without a detector in alarm, the system will not release water into the pipes. After water fills the pipes, the system acts as a traditional wet pipe system and will not discharge water until temperatures in the room are high enough to activate a sprinkler.

A double-interlock pre-action system provides additional redundancy before water is released into pipes. Both a detector actuation, typically a smoke detector, and a sprinkler actuation must occur simultaneously before water will enter pipes. Usually the most critical applications warrant such a system.

Alternative suppression systems, clean-agent or inert gases are the most common non-water based protection systems in the data centers. These gaseous agents actuate early in a fire scenario to protect the data and IT equipment. Clean agents were developed as a replacement of Halon 1301. Because these systems do not use water, they are considered less likely to damage electrical equipment.

Clean agents are classified as either halocarbon agents or inert gases. Both types require a minimum design concentration based on agent classification and potential fire scenario to extinguish a fire. Factors such as pre-discharge warning signals, manual discharge stations, space considerations for agent supply, reserve agent supply, total flooding, or local flooding applications need to be considered when designing clean agent systems.

Water mist provides another alternative. These suppression systems use high pressure water to produce very fine water droplets, with most droplet diameters less than 1000 microns. Mist systems have benefits similar to clean-agent systems.

Many authorities having jurisdiction will not allow an alternative automatic extinguishing system to be the only means of fire protection in a data center. Typically, a pre-action sprinkler system is required in addition to an alternative system. Alternative suppression systems are typically used for property protection and business continuity, extinguishing a fire in its earliest stages. Sprinkler systems provide complete sprinkler coverage required by code, in the event of the alternative system failing.

In all instances, the fire alarm and suppression systems are required to be interfaced in a data center fire protection application. A control panel, often referred to as a "releasing panel," relies on input from the fire alarm detection system to then subsequently open pre-action valves, initiate alternative suppression, sound pre-discharge alarms, shut down ventilation, or other actions. It is important for any design that all required interfaces be thoroughly examined and considered.

Wet Pipe Sprinklers System	**Wet Pipe Sprinklers System**

Clean Agent	**Inert Gas**

Water Mist

Figure 29: **Fire Suppression Systems in the Data Center**

The fire-fighting system has also been taught in ME403 module. It covers fire protection systems, fire-fighting system control and fire detection and alarm systems. Participants can refer to the notes in ME403 module for better understanding of the functions and structures of the fire-fighting system.

3.7.6 Security System

Data center security refers to the physical practices and virtual technologies used to protect a data center from external threats and attacks. A data center is a facility that stores IT infrastructure, composed of networked computers and storage used to organize, process, and store large amounts of data.

Data centers provide services such as data storage, backup and recovery, data management and networking. Because data centers hold sensitive or proprietary information, such as customer data or intellectual property, sites have to be both digitally and physically secured.

3.7.6.1 Physical Security

A data center building's most obvious security characteristics are related to design and layout. The building itself may be designed as a single-purpose or multipurpose unit, the latter of which operates as a shared space and may house businesses unrelated to the data center. A data center building is usually built away from major roads in order to establish buffer zones made up of a combination of landscaping and crash-proof barriers.

The physical security of a data center is the set of protocol built-in within the data center facilities in order to prevent any physical damage to the machines storing the data. Those protocols should be able to handle everything ranging from natural disasters to corporate espionage to terrorist attacks. Access into a data center facility is fairly limited. Most do not have exterior windows and relatively few entry points.

To prevent physical attacks, a data center makes use of security system which is basically made up of the following equipment:

i) CCTV Camera Network

Another long-time staple of physical security technology, video surveillance is still incredibly valuable for data centers. Closed-circuit television cameras (CCTV) with full pan, tilt, and zoom features should monitor exterior access points and all interior doors as well as the data floor itself. Camera footage should be backed up digitally and archived offsite to guard against unauthorized tampering.

Figure 30: CCTV Camera in the Data Center

ii) Access Card/Biometric Technology

Human error remains the main threat to any kind of security, and that goes for data centers, too. Secured areas, especially those that hold servers and key assets, should never grant access to unauthorized personnel. To ensure this, a data centers need multiple access controls on all layers, both physical and digital.

Access cards and identification badges are the first measures that come to mind; even office buildings that don't house data centers use them. Other safeguards include continuous background checks of authorized personnel, scales that weight visitors upon entering and exiting the premises, and biometric locks.

Biometric technology is an effective layer of security, based as it is on an individual's unique characteristics, such as a fingerprint or retina scan. More and more organizations are using biometrically controlled locks in addition to traditional access cards.

Depending on the sensitivity of data and equipment involved, specialized security measures should be enforced for each room and area. Every individually secured area should require more than one form of authentication and access control, as not all employees should have access to every part of a data center.

Figure 31: Access Card

Figure 32: Biometric Technology

The security system has also been taught in ME403 module. It covers Closed Circuit Television (CCTV), access control systems and security alarm systems. Participants can refer to the notes in Annex 1, ME403 module for better understanding of the functions and structures of the security system.

4.0 Conclusion

The advances in technology in business and industry have contributed to the high demand for data center. Most businesses or industries have their own data center where the size of data center is dependent on the size of business or industry. With the latest trends in businesses such as online business where it is very much in need of big data centers for businesses. Examples are like Facebook, where the size of a data center is needed to exceed the size of a football field to operate their business.

The growth in demand for data centers and cloud services expected to be increased in demand and appears to be significant opportunity in this segment of Saudi Arabia's ICT market. Pressure on departmental expenditures in the public sector and a subsequent slowing of growth in the private sector could act as drivers for this expansion as customers seek cost-saving synergies.

Growth in the market is also being advanced by a proliferation of offerings from service providers. Saudi Telecommunications Company (STC), Integrated Telecom Company (ITC) and Mobily are all major players in this field, but many smaller companies acting as hosting providers or systems integrators are also among a list of 17 companies with data centre and managed and cloud services offerings.

Both STC and Mobily have invested heavily in the construction of their own data centres, hoping to capitalise on their investments as more organisations and businesses in the Kingdom recognise the potential advantages of utilising their facilities.

In the valuation of machinery and equipment for the data centers, the first step that a machinery and equipment valuer should take is to understand the size and components of the data center. i.e. the number of servers, routers, switches, computers, firewalls and all the support equipment such as air conditioning system, security system, fire suppression system, etc.

The valuer also should also identify the components in each section of the data center. A detailed list of equipment and component can be obtained from the data center owner and an inspection of each equipment and components can be made at the data center.

As a guide to machinery and equipment valuer in valuation of the data center, refer to the notes provided above including the sample of valuation report of the data center components provided in the **Appendix C.**

REFERENCES

Chris DiMinico, MC Communications, Telecommunications Infrastructure Standard for Data Centers, ANSI/TIA-942

CITC Publications 2015, ICT Report: Data Center, Managed and Cloud Services in Saudi Arabia

CISCO, 2020, Data Center and Virtualization, What is a Data Center extracted from https://www.cisco.com/c/en/us/solutions/data-center-virtualization/what-is-a-data-center.html

Margaret Rouse, 2019, Whatls.com, Definition Data Center extracted from https://searchdatacenter.techtarget.com/definition/data-center

Techopedia, 2017, Data Center Infrastructure extracted from https://www.techopedia.com/definition/29711/data-center-infrastructure

John Spacey, 2017 Simplicable, 15 Components of a Data Center extracted from https://simplicable.com/new/data-centers

Rack Solutions Blog, 2019, What is a server? extracted from https://www.racksolutions.com/news/blog/what-is-a-server/

Jonathan Strickland, 2020, Howstuffworks, How Server Virtualization Works extracted from https://computer.howstuffworks.com/server-virtualization.htm

John Aaron, 2020, Data Center Post, Which Type of Server Hardware Is Best For Your Business? extracted from https://datacenterpost.com/which-type-of-server-hardware-is-best-for-your-business/

Computer Hope, 2019, Router extracted from https://www.computerhope.com/jargon/r/router.htm

Alan Seal, 2019, VXChange, Why Do Routers Matter in Edge Data Center extracted from https://www.vxchnge.com/blog/routers-edge-data-center

Rich Edmonds, 2019, Windows Central, How To Choose Between a Managed and Unmanaged Network Switch extracted from https://www.windowscentral.com/should-you-buy-managed-or-unmanaged-switch#managed

Eric Dosal, 2019, Compuquip Cybersecurity, What is a Firewall? The Different Firewall Types & Architectures extracted from https://www.compuquip.com/blog/the-different-types-of-firewall-architectures

Robert G. Ferell, 2019, Techtarget Network, The 5 Different Types of Firewalls extracted from https://searchsecurity.techtarget.com/feature/The-five-different-types-of-firewalls

Ruben Cocheno, 2019, PXOSYS, What is a Firewall? extracted from https://www.pxosys.com/what-is-a-firewall/

Psychz-Sharad, 2017, PSYCHZNETWORKS, What Role UPS System Plays in a Data Center? extracted from https://www.psychz.net/client/question/en/what-role-ups-system-plays-in-a-data-center.html

Blair Felter, 2019, VXChange, What Is A Raise Floor Important? extracted from https://www.vxchnge.com/blog/raised-floor-important

Kaylie Gyarmathy, 2019, VXChange, Everything You Need To Know About Data Center Cooling Technologies extracted from https://www.vxchnge.com/blog/data-center-cooling-technology

Tom Banta, 2020, VXChange, Everything You Need To Know About Data Center Power Management extracted from https://www.vxchnge.com/blog/data-center-power-requirements

Steman, 2018, Datacenter.com, Data Center Power Infrastructure Explained extracted from https://datacenter.com/news_and_insight/data-center-power-infrastructure-explained/

Jeffrey Tubbs, Garr Disalvo, Andrew Neviackas, 2013, Facilitiesnet, Data Center Fire Suppression Systems: What Facility Managers Should Consider extracted from https://www.facilitiesnet.com/datacenters/article/Data-Center-Fire-Suppression-Systems-What-Facility-Managers-Should-Consider--14595

ORR Protection, 2020, Data Center Fire Suppression extracted from https://www.orrprotection.com/applications/data-centers

Blair Felter, 2019, VXChange, What Are The Most Important Data Center Security Standards extracted from https://www.vxchnge.com/blog/data-center-physical-security-standards

SecurityTrails Blog, 2019, What is Data Center Security? Top 5 Best Practices extracted from https://securitytrails.com/blog/data-center-security

Frank Tyger, 2019, Smartech Cables, How Many Types of Cabling Are Used In Data Center? extracted from https://www.smartechcables.com/blog/cabling-are-used-in-data-centers/